DIAMIN®
1962

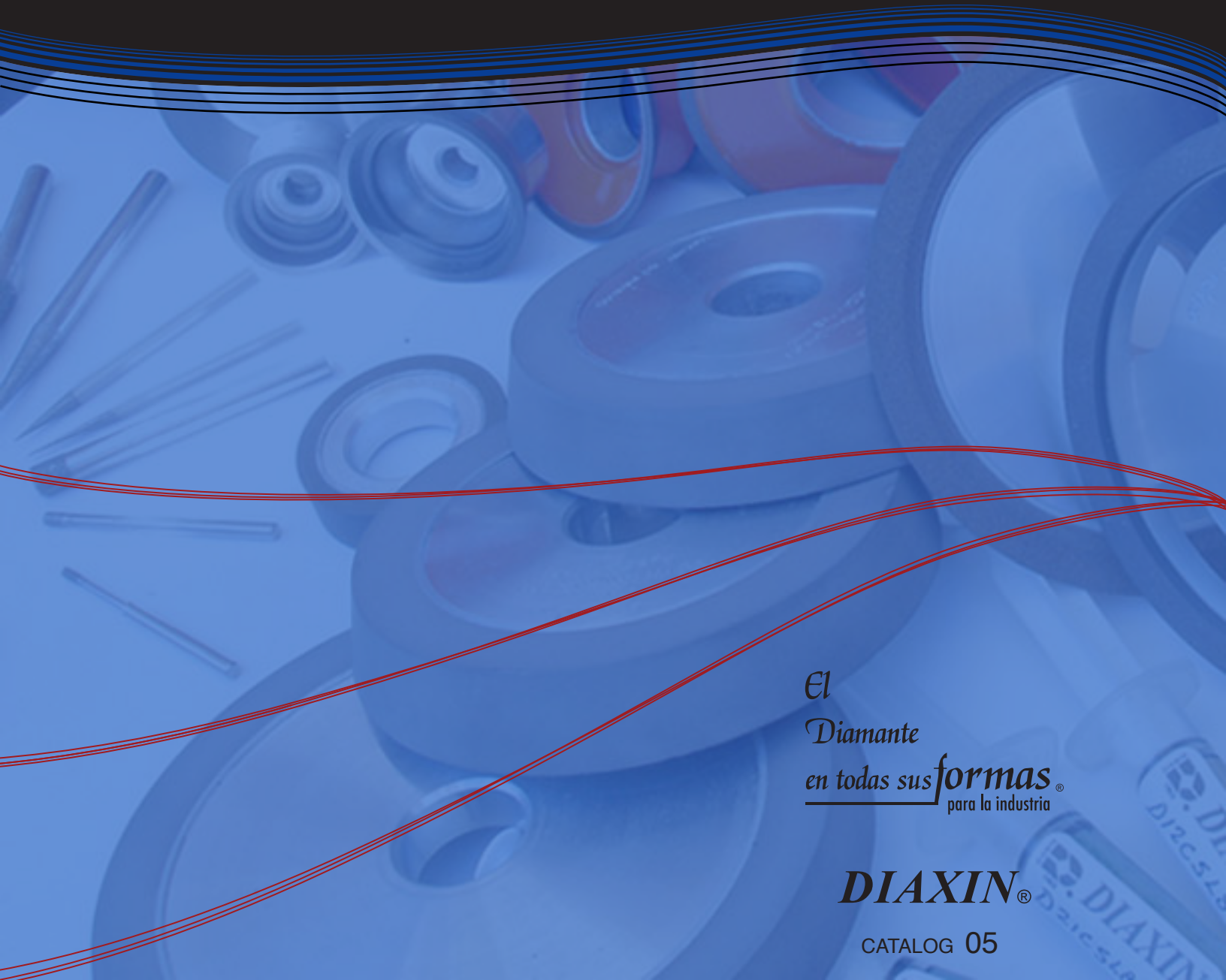

El Diamante en todas sus formas®
para la industria

DIAXIN®

CATALOG 05

DIAMIN 1962 ®

Diamantes Industriales de México SA de CV is a manufacturer of Diamond and CBN (Cubic Boron Nitride) super abrasive products since 1962, established in Mexico City we serve our customers in Mexico, USA, South America, Europe and Asia.

Our Focus on our customers allows us to be closer to their requirements and develop the appropriate tool for each application that will perform precisely and reliably improving the efficiency of the process.

INDEX

INDEX

WEELS (B)

6 A 2 C

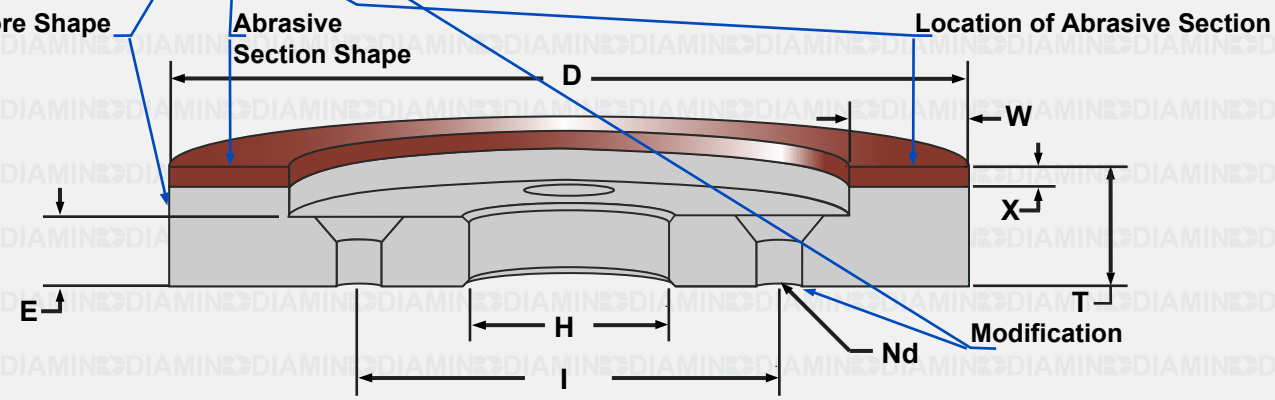

FIGURE 2
CORE SHAPE

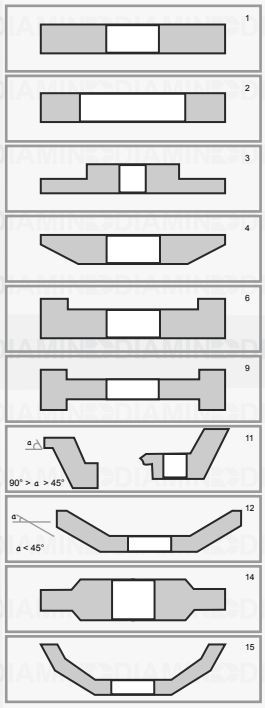

FIGURE 3
ABRASIVE SECTION SHAPE

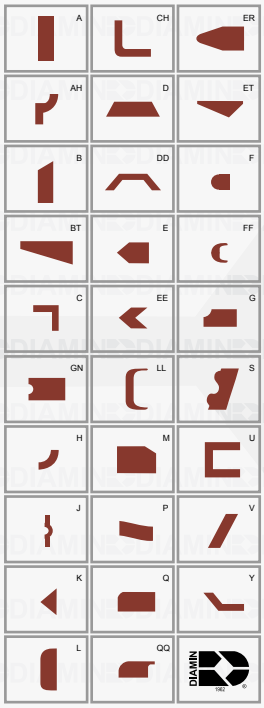

FIGURE 4
LOCATION OF ABRASIVE SECTION

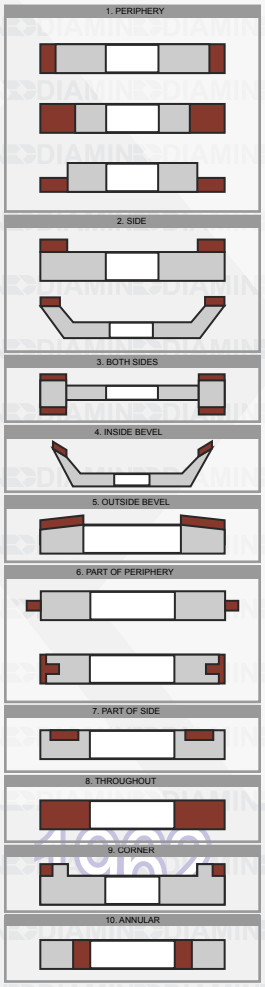

FIGURE 5

MODIFICATION

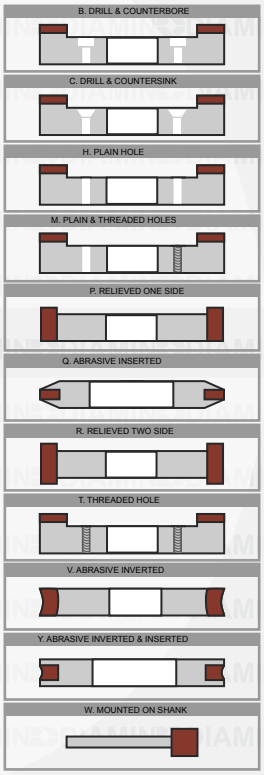

WHEEEL SPECIFICATION: B1A1, D120R100B7R4, 40001-1

TABLE 1

B	Family of product	
1A1	Shape of the Wheel	
D	Superabrasive Type	D Diamond B CBN (Cubic Boron Nitride)
120	Grit Size	60 Coarse 80 100 120 140 Medium 170 200 230 270 Fine 325 400 500 Ultrafine 600 800 Special 1200 Applications 1500
R	Hardness	J Soft L N P R Hard
100	Concentration	25 Low 50 75 Medium 100 125 High 150
B	Bond	B Resin M Metal V Vitrified E Electroplated
7R4	Bond Modification	
40001-1	Internal Control Number	

- **Superabrasive Type**
  Diamond (D)
  Used for working ceramics, carbides, glass, ferrite, graphite, plastics, quartz, and other non- ferrous materials.

  CBN (B)
  CBN (Cubic Boron Nitride) is a synthetic super abrasive that its hardnes is only inferior to diamond, it is used for tool steel, high speed steel, alloy steel hardned to 50+ Rc.

- **Grit Size**
  The grit size determines the behavior of the super abrasive wheel:
  Coarse grits: High removal rates, rough finish.

  Medium and fine: Are used to produce a determined surface finish and in some cases to help the wheel hold its shape (edge and radius).

  Ultrafine and special applications grits: Are used for polishing.

  We recommend using the coarsest grit possible to obtain the highest efficiency

- **Hardness**
  This refers to the cutting action of the wheel; a harder wheel has less cutting ability, although the grit size and concentration also determine this behavior.

- **Concentration**
  This refers to the amount of super abrasive per volume unit in the wheel. It is established that 4.4 carats per cubic centimeter is considered 100 concentration. It should be chosen for every application, but in general a high concentration will hold its shape better and have longer life, although it's not always the best choice.

- **Bond**
  Using wheels with our technology allows our customers have the appropriate bond for each application to perform according to their requirement.

- **Bond Modification**
  Is a number assinged by manufacturer.

PERIPHERAL SPEEDS

m/s	12	15	18	21	24	27	30	33	36	39	42	45	48	51
SFPM	2,362	2,953	3,543	4,134	4,724	5,315	5,906	6,496	7,087	7,677	8,268	8,858	9,449	10,039
D(mm)							RPM							
3	76,394	95,493	114,592	133,690	152,789	171,887	190,986	210,085	229,183	248,282	267,380	286,479	305,577	324,676
5	45,837	57,296	68,755	80,214	91,673	103,132	114,592	126,051	137,510	148,969	160,428	171,887	183,346	194,806
7	32,740	40,926	49,111	57,296	65,481	73,666	81,851	90,036	98,221	106,406	114,592	122,777	130,962	139,147
9	25,465	31,831	38,197	44,563	50,930	57,296	63,662	70,028	76,394	82,761	89,127	95,493	101,859	108,225
10	22,918	28,648	34,377	40,107	45,837	51,566	57,296	63,025	68,755	74,485	80,214	85,944	91,673	97,403
12	19,099	23,873	28,648	33,423	38,197	42,972	47,746	52,521	57,296	62,070	66,845	71,620	76,394	81,169
15	15,279	19,099	22,918	26,738	30,558	34,377	38,197	42,017	45,837	49,656	53,476	57,296	61,115	64,935
18	12,732	15,915	19,099	22,282	25,465	28,648	31,831	35,014	38,197	41,380	44,563	47,746	50,930	54,113
20	11,459	14,324	17,189	20,054	22,918	25,783	28,648	31,513	34,377	37,242	40,107	42,972	45,837	48,701
25	9,167	11,459	13,751	16,043	18,335	20,626	22,918	25,210	27,502	29,794	32,086	34,377	36,669	38,961
30	7,639	9,549	11,459	13,369	15,279	17,189	19,099	21,008	22,918	24,828	26,738	28,648	30,558	32,468
35	6,548	8,185	9,822	11,459	13,096	14,733	16,370	18,007	19,644	21,281	22,918	24,555	26,192	27,829
40	5,730	7,162	8,594	10,027	11,459	12,892	14,324	15,756	17,189	18,621	20,054	21,486	22,918	24,351
50	4,584	5,730	6,875	8,021	9,167	10,313	11,459	12,605	13,751	14,897	16,043	17,189	18,335	19,481
75	3,056	3,820	4,584	5,348	6,112	6,875	7,639	8,403	9,167	9,931	10,695	11,459	12,223	12,987
100	2,292	2,865	3,438	4,011	4,584	5,157	5,730	6,303	6,875	7,448	8,021	8,594	9,167	9,740
125	1,833	2,292	2,750	3,209	3,667	4,125	4,584	5,042	5,500	5,959	6,417	6,875	7,334	7,792
150	1,528	1,910	2,292	2,674	3,056	3,438	3,820	4,202	4,584	4,966	5,348	5,730	6,112	6,494
175	1,310	1,637	1,964	2,292	2,619	2,947	3,274	3,601	3,929	4,256	4,584	4,911	5,238	5,566
200	1,146	1,432	1,719	2,005	2,292	2,578	2,865	3,151	3,438	3,724	4,011	4,297	4,584	4,870
250	917	1,146	1,375	1,604	1,833	2,063	2,292	2,521	2,750	2,979	3,209	3,438	3,667	3,896
300	764	955	1,146	1,337	1,528	1,719	1,910	2,101	2,292	2,483	2,674	2,865	3,056	3,247
350	655	819	982	1,146	1,310	1,473	1,637	1,801	1,964	2,128	2,292	2,456	2,619	2,783
400	573	716	859	1,003	1,146	1,289	1,432	1,576	1,719	1,862	2,005	2,149	2,292	2,435

Peripheral speed= (External diameter) X (3.1416)XRPM (60 sec)

BASIC GUIDELINES

The wheels should be trued and dressed after mounting.
Avoid dry grinding, use lubricant when possible and make sure it is directed to the point of contact between the Wheel and the work piece.
The machine should not have any vibrations and be in good conditions.
Work support should be rigid and as short as possible.
Use the appropriate wheels for each application, there is no such thing as a “wheel for all applications”.
Avoid excessive down feeds.

Diamond Wheel recommendations

Avoid grinding steel.

Use adequate speeds, too high or low speed will affect the performance of the Wheel:

15-20m/s is better for dry grinding.
25-30m/s is better for wet grinding.

CBN Wheel recommendations

Using oil as lubricant is better than an emulsion.

Use adequate speeds, too high or low speed will affect the performance of the Wheel:

20m/s is better for dry grinding.
From 30 m/s is better for wet grinding.

Wheel hub

There are several materials available for the Diamond Wheel hub, aluminum, aluminum-resin, phenolics (Bakelite) steel and others; with our technical support we may help you select the most suitable for your application.

Notes

1) There are a wide variety of products that are not listed in this catalog and we may manufacture. Please contact our customer service for information.

2) All recommendations are base on our experience, but real working conditions are out of our control, so the user is responsible for the use of our recommendation.

3) All our products have a limited warranty only for manufacturing defects, and we are only responsible to the replacement of the product, and nothing more.

4) If you have any doubts, consult us before making changes to your process or start new ones.

5) Use safety gloves, face and eye protection, hearing protection, wheel guards on the machines, dust protection and follow ANSI Safety Requirement B7.1.

6) Most of the dust produced in a grinding process comes from the material being ground, Inhalation of this dust may be harmful for the human body, Use dust collecting equipment and dust protection equipment , and follow all the recommendations from their manufacturer for their use.

Piece	Page	Piece	Page
 1A1	10	 3V1	21
 1E1	13	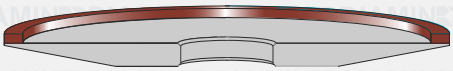 4A2	22
 1F1	14	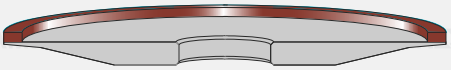 4A2P	23
 1V1	15	 4V2	24
 1D1	16	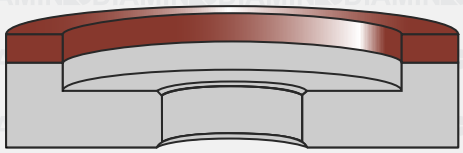 6A2	25
 1L1	16	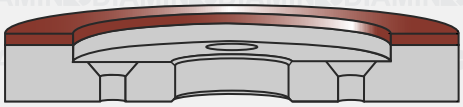 6A2C	26
 1Q1	16	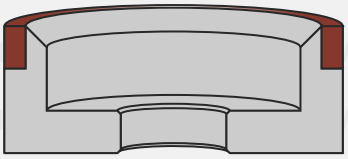 6A9	27
 2A2T	17	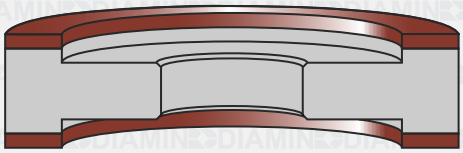 9A3	28
 3A1	18	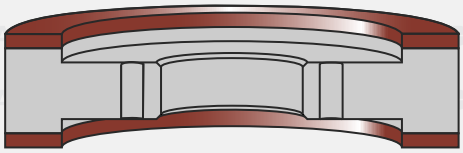 9A3H	29
 3F1	21	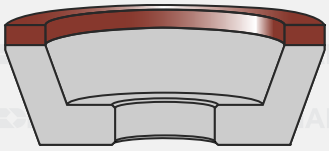 11A2	30

Piece	Page	Piece	Page
11A9 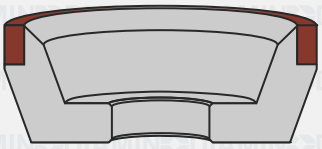	36	14A1 	42
11V2 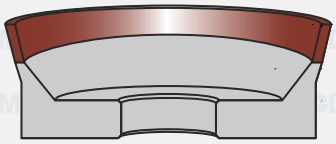	32	14F1 	45
11V2W 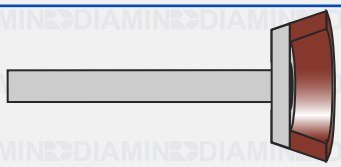	33	14V1 	45
11V4 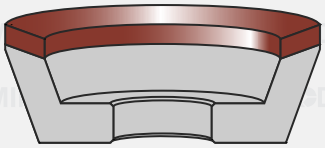	36	15A2 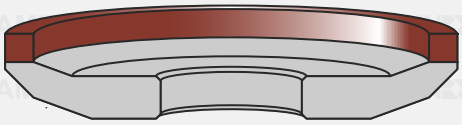	46
11V5 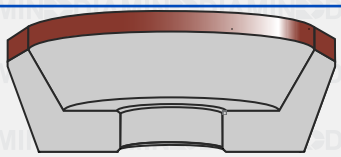	34	15V9 	47
11V9 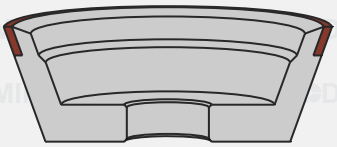	35	BDW 	48
12A2 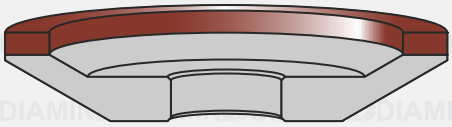	37	BDWA 	50
12V9 	39	HH1 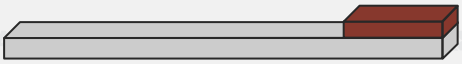	51
12V4 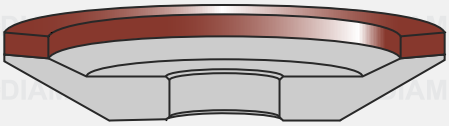	41	HH2 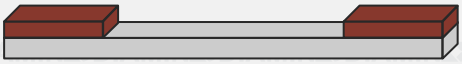	51
12V5 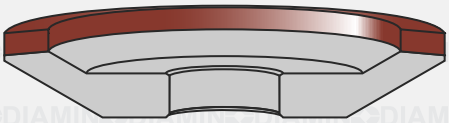	41		

1A1

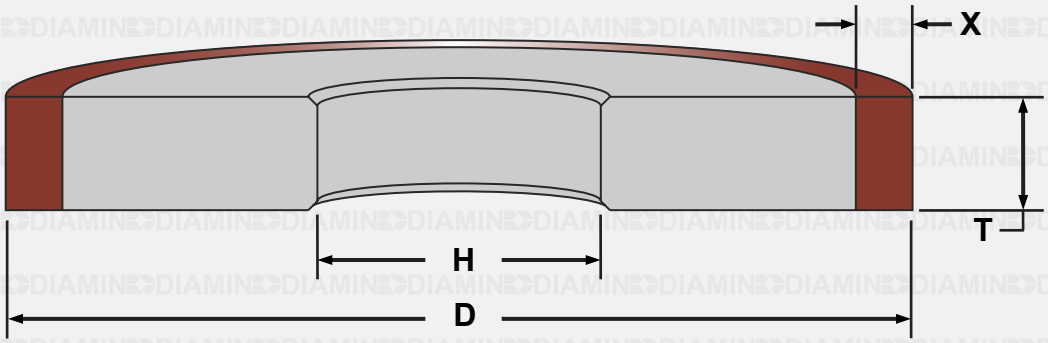

D	T	X	H
10	6	2	--
10	10	2	--
10	12	2	--
12	6	2	--
12	10	2	--
12	12	2	--
13	6	2	--
13	10	2	--
13	12	2	--
15	6	2	--
15	10	2	--
15	12	2	--
16	6	2	--
16	10	2	--
16	12	2	--
20	6	3	--
20	10	3	--
20	12	3	--
20	16	3	--

D	T	X	H
25	6	3	--
25	10	3	--
25	12	3	--
25	16	3	--
30	6	3	--
30	10	3	--
30	12	3	--
30	16	3	--
35	6	3	--
35	10	3	--
35	12	3	--
35	16	3	--
35	20	3	--
40	6	3, 5	--
40	10	3, 5	--
40	12	3, 5	--
40	16	3, 5	--
40	20	3, 5	--
50	6	3, 6	--
50	10	3, 6	--
50	12	3, 6	--
50	15	3, 6	--
50	20	3, 6	--

How to Order: Form, “D” x “T” x “X” x “H”, Superabrasive type, Grit Size, Grade and Bond.
Order Example: 1A1 150x10x3 D80R100B455P4 H = 20,00
1A1 125x6x3 B120R100B314K6 H = 31,75

Acot:mm

1A1

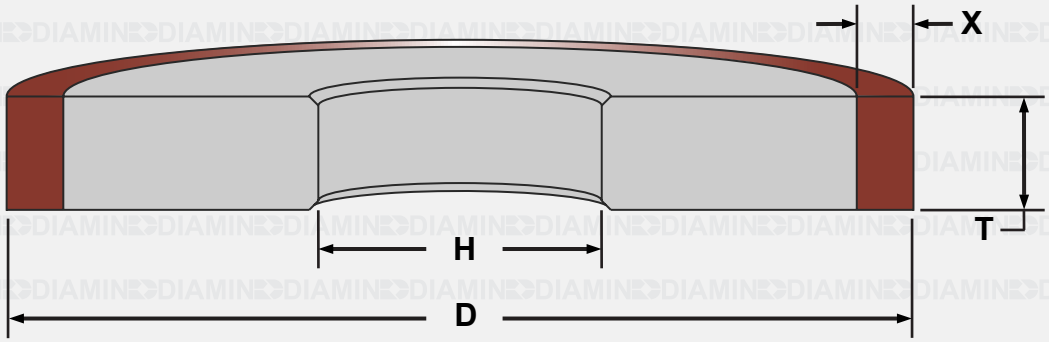

D	T	X	H
75	6	3, 6, 10	--
75	10	3, 6, 10	--
75	12	3, 6, 10	--
75	15	3, 6, 10	--
75	20	3, 6, 10	--
100	6	3, 6, 10	--
100	10	3, 6, 10	--
100	12	3, 6, 10	--
100	15	3, 6, 10	--
100	20	3, 6, 10	--
125	6	3, 6, 10	--
125	10	3, 6, 10	--
125	12	3, 6, 10	--
125	15	3, 6, 10	--
125	20	3, 6, 10	--
150	6	3, 6, 10, 13	--
150	10	3, 6, 10, 13	--
150	12	3, 6, 10, 13	--
150	15	3, 6, 10, 13	--
150	20	3, 6, 10, 13	--
150	25	3, 6, 10, 13	--

D	T	X	H
175	6	3, 6, 10	--
175	10	3, 6, 10	--
175	12	3, 6, 10	--
175	15	3, 6, 10	--
175	20	3, 6, 10	--
200	6	3, 6, 10	--
200	10	3, 6, 10	--
200	12	3, 6, 10	--
200	15	3, 6, 10	--
200	20	3, 6, 10	--
200	25	3, 6, 10	--
250	6	3, 6, 10	--
250	10	3, 6, 10	--
250	12	3, 6, 10	--
250	15	3, 6, 10	--
250	20	3, 6, 10	--
250	25	3, 6, 10	--
300	10	3, 6, 10	--
300	12	3, 6, 10	--
300	15	3, 6, 10	--
300	20	3, 6, 10	--
300	25	3, 6, 10	--
300	30	3, 6, 10	--
300	40	3, 6, 10	--
300	50	3, 6, 10	--

How to Order: Form, “D” x “T” x “X” x “H”, Superabrasive type, Grit Size, Grade and Bond.
Order Example: 1A1 150x10x3 D80R100B455P4 H = 20,00
1A1 125x6x3 B120R100B314K6 H = 31,75

Acot:mm

1A1

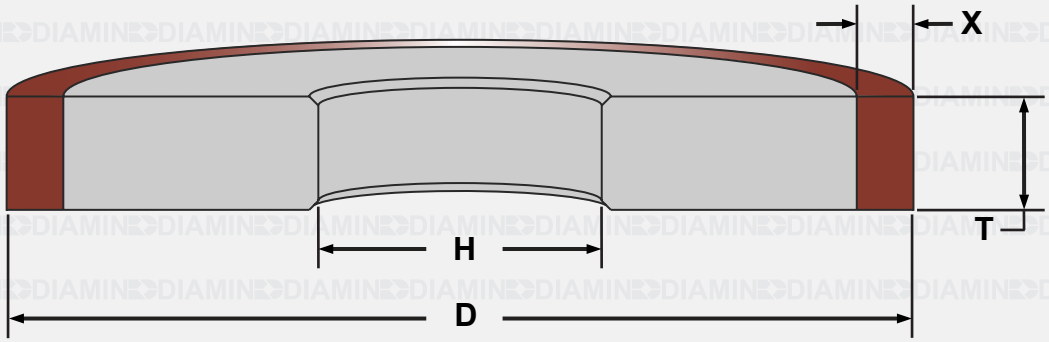

D	T	X	H
350	10	3, 6	--
350	12	3, 6	--
350	15	3, 6	--
350	20	3, 6	--
350	25	3, 6	--
350	30	3, 6	--
350	40	3, 6	--
350	50	3, 6	--
400	10	3, 6	--
400	12	3, 6	--
400	15	3, 6	--
400	20	3, 6	--
400	25	3, 6	--
400	30	3, 6	--
400	40	3, 6	--
400	50	3, 6	--

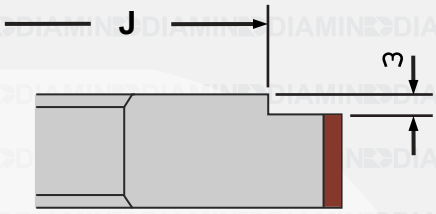

Values of J according to D

D	J
250	**180**
300	230
350	**280**
400	330

Other sizes available.

How to Order: Form, “D” x “T” x “X” x “H”, Superabrasive type, Grit Size, Grade and Bond.
Order Example: 1A1 150x10x3 D80R100B455P4 H = 20,00
1A1 125x6x3 B120R100B314K6 H = 31,75

Acot:mm

1E1

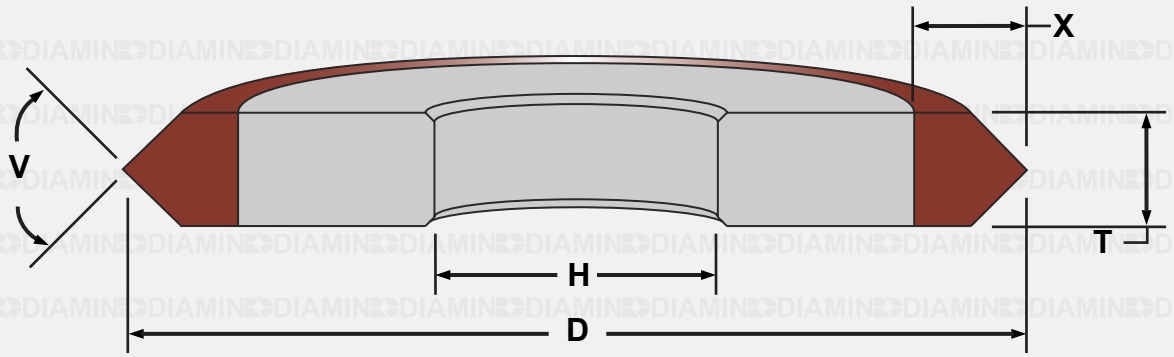

D	T	X	H	V
75	3	6	--	45º, 60º, 90
75	6	6	--	60º, 90º
100	3	6, 10	--	45º, 60º, 90
100	6	6, 10	--	60º, 90º
100	10	10	--	90º, 120º
100	12	10	--	90º, 120º
125	3	6, 10	--	45º, 60º, 90
125	6	6, 10	--	60º, 90º
125	10	10	--	90º, 120º
125	12	10	--	90º, 120º
150	3	6, 10	--	45º, 60º, 90
150	6	6, 10	--	60º, 90º
150	10	10	--	90º, 120º
150	12	10	--	90º, 120º
175	3	6, 10	--	45º, 60º, 90
175	6	6, 10	--	60º, 90º
175	10	10	--	90º, 120º
175	12	10	--	90º, 120º

Other sizes available.

How to Order: Form, "D" x "T" x "X", Superabrasive type, Grit Size, Grade, Concentration, Bond, "H" y "V".

Order Example: 1E1 150x10x10 D80R100B455P4 H = 31,75, V = 90º
1E1 125x6x10 B120R100B314K6 H = 31,75, V = 60º

Acot:mm

1F1

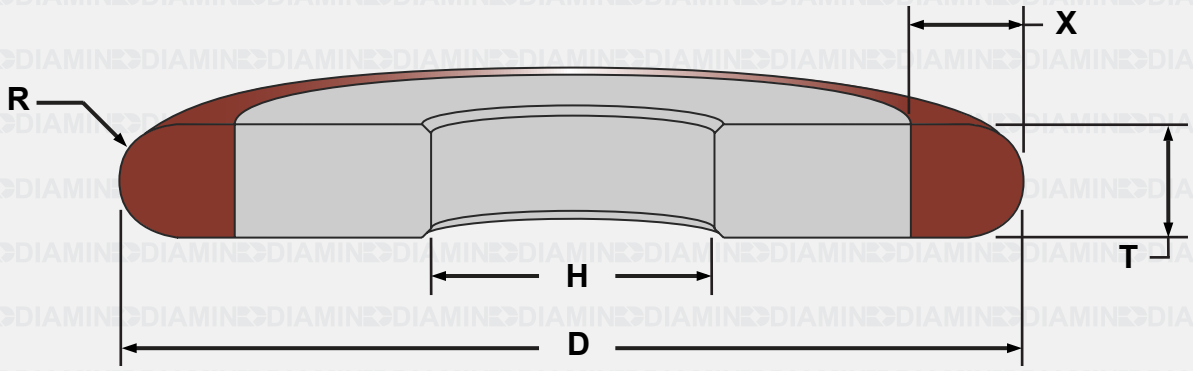

D	T	X	H	R
50	3	3, 6	--	1.5
50	4	3, 6	--	2.0
50	5	3, 6	--	2.5
50	6	3, 6	--	3.0
50	8	3, 6	--	4.0
50	10	3, 6	--	5.0
75	3	3, 6	--	1.5
75	4	3, 6	--	2.0
75	5	3, 6	--	2.5
75	6	3, 6	--	3.0
75	8	3, 6	--	4.0
75	10	3, 6	--	5.0
100	3	3, 6	--	1.5
100	4	3, 6, 10	--	2.0
100	5	3, 6, 10	--	2.5
100	6	6, 10	--	3.0
100	8	6, 10	--	4.0
100	10	6, 10	--	5.0
100	12	6, 10	--	6.0
125	3	3, 6	--	1.5
125	4	3, 6, 10	--	2.0
125	5	3, 6, 10	--	2.5
125	6	6, 10	--	3.0
125	8	6, 10	--	4.0
125	10	6, 10	--	5.0
125	12	6, 10	--	6.0

D	T	X	H	R
150	3	3, 6	--	1.5
150	4	3, 6, 10	--	2.0
150	5	3, 6, 10	--	2.5
150	6	6, 10	--	3.0
150	8	6, 10	--	4.0
150	10	6, 10	--	5.0
150	12	6, 10	--	6.0
175	4	3, 6, 10	--	2.0
175	5	3, 6, 10	--	2.5
175	6	6, 10	--	3.0
175	8	6, 10	--	4.0
175	10	6, 10	--	5.0
175	12	6, 10	--	6.0
200	4	3, 6, 10	--	2.0
200	5	3, 6, 10	--	2.5
200	6	6, 10	--	3.0
200	8	6, 10	--	4.0
200	10	6, 10	--	5.0
200	12	6, 10	--	6.0

Other sizes available.

How to Order: Form, "D" x "T" x "X", Superabrasive type, Grit Size, Grade, Concentration, Bond, "H" and "R".

Order Example: 1F1 150x3x6 D80R100B455P4 H = 31,75, R = 1,5
1F1 100x6x6 B120R100B314K6 H = 31,75, R = 3,0

Acot:mm

1V1

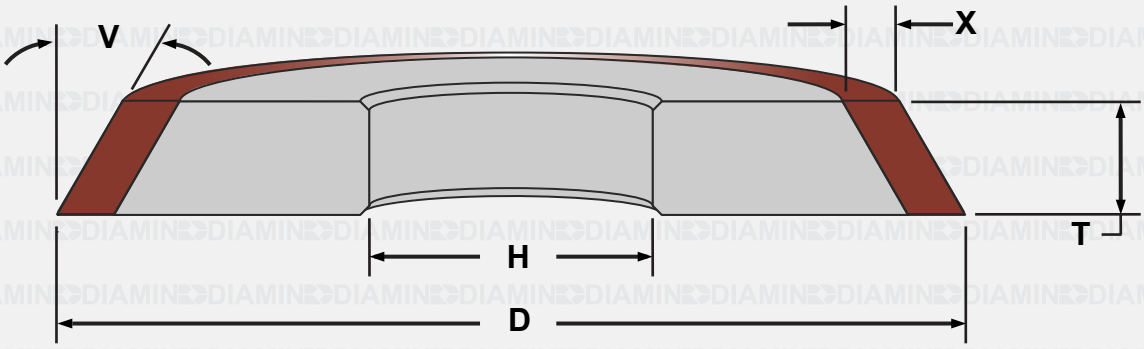

D	T	X	H	V
100	3	6	--	10º, 15º, 20º
100	3	6	--	25º, 30º, 45º
100	6	6	--	10º, 15º, 20º
100	6	6	--	25º, 30º, 45º
100	10	6, 10	--	10º, 15º, 20º
100	10	6, 10	--	25º, 30º, 45º
100	10	6	--	60º
100	12	6, 10	--	10º, 15º, 20º
100	12	6, 10	--	25º, 30º, 45º
100	16	6, 10	--	10º, 15º, 20º
100	16	6, 10	--	25º, 30º, 45º
125	3	6	--	10º, 15º, 20º
125	3	6	--	25º, 30º, 45º
125	6	6	--	10º, 15º, 20º
125	6	6	--	25º, 30º, 45º
125	10	6, 10	--	10º, 15º, 20º
125	10	6, 10	--	25º, 30º, 45º
125	12	6, 10	--	10º, 15º, 20º
125	12	6, 10	--	25º, 30º, 45º
125	16	6, 10	--	10º, 15º, 20º
125	16	6, 10	--	25º, 30º, 45º

D	T	X	H	V
150	3	6	--	10º, 15º, 20º
150	3	6	--	25º, 30º, 45º
150	6	6	--	10º, 15º, 20º
150	6	6	--	25º, 30º, 45º
150	10	6, 10	--	10º, 15º, 20º
150	10	6, 10	--	25º, 30º, 45º
150	12	6, 10	--	10º, 15º, 20º
150	12	6, 10	--	25º, 30º, 45º
150	16	6, 10	--	10º, 15º, 20º
150	16	6, 10	--	25º, 30º, 45º
175	3	6	--	10º, 15º, 20º
175	3	6	--	25º, 30º, 45º
175	6	6	--	10º, 15º, 20º
175	6	6	--	25º, 30º, 45º
175	10	6	--	10º, 15º, 20º
175	10	6	--	25º, 30º, 45º
175	12	6	--	10º, 15º, 20º
175	12	6	--	25º, 30º, 45º
200	6	6	--	10º, 15º, 20º
200	6	6	--	25º, 30º, 45º
200	10	6	--	10º, 15º, 20º
200	10	6	--	25º, 30º, 45º
200	12	6	--	10º, 15º, 20º
200	12	6	--	25º, 30º, 45º

Other sizes available.

How to Order: Form, "D" x "T" x "X", Superabrasive type, Grit Size, Grade, Concentration, Bond, "H" and "V".
Order Example: 1V1 150x13x6 D80R100B455P4 H = 31,75, V = 45º
1V1 125x10x6 B120R100B314K6 H = 31,75, V = 30º

Acot:mm

1D1

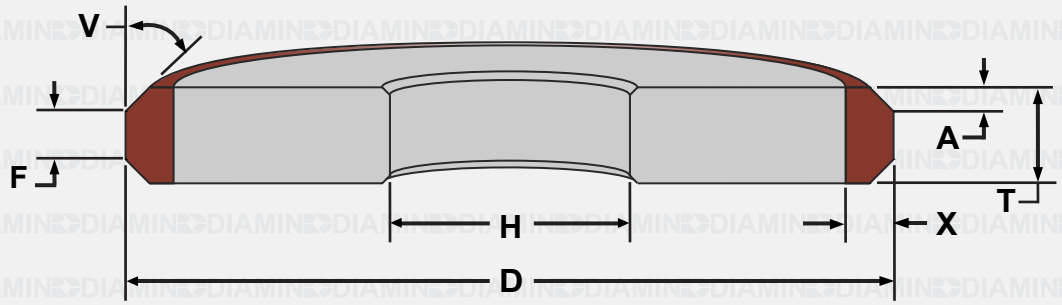

1L1

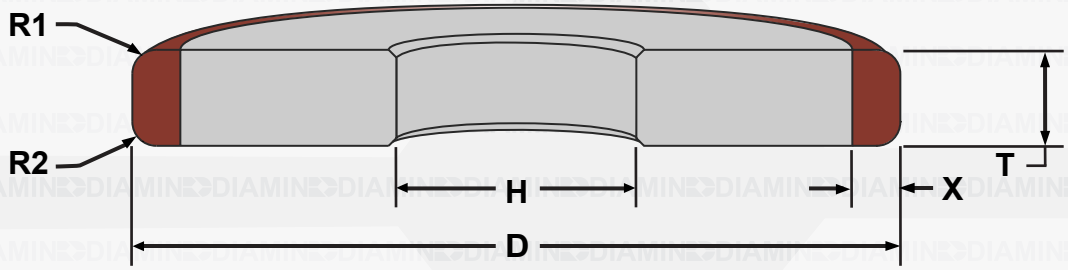

1Q1

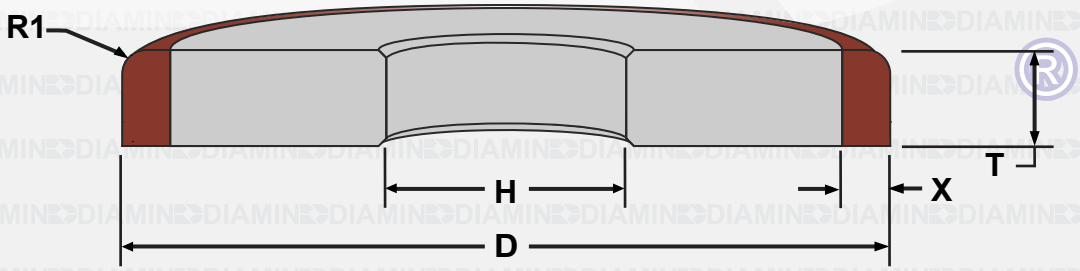

Other forms available.

2A2T

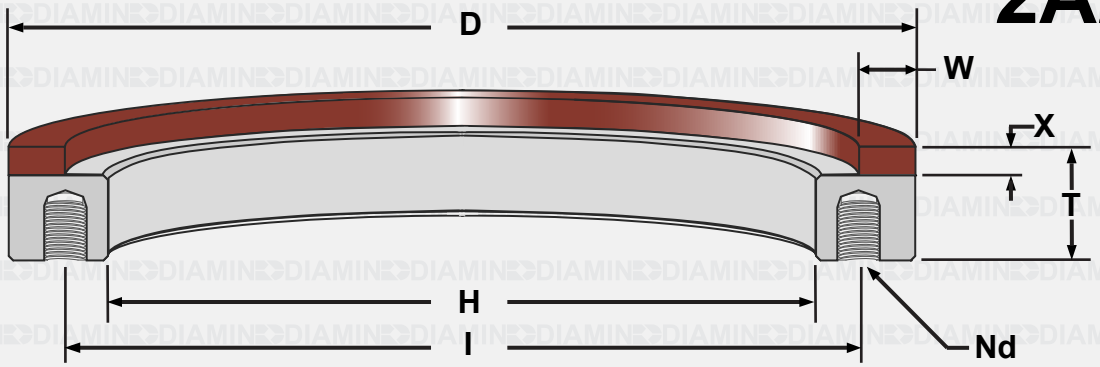

D	T	W	X	H	I	N	d
150	22	6, 10, 13	3, 5, 6	115.1128	133.35	6	1/4" - 20
150	22	15, 19	3, 5, 6	115.1128	133.35	6	1/4" - 20
200	25	6, 10	3, 5, 6	165.1	184.15	6	3/8" - 16
200	25	19	3, 5, 6	165.1	184.15	6	3/8" - 16
250	25	6, 10	3, 5, 6	203.2	228.6	6	3/8" - 16
250	25	15	3, 5, 6	215	228	6	M6 - 1.0
250	40	10	3, 5, 6	215	228	6	M6 - 1.0
280	25	25	3, 5, 6	228.6	254	6	3/8" - 16
280	32	25	3, 5, 6	228.6	254	6	3/8" - 16
280	35	25	6, 10	228.6	254	6	3/8" - 16
300	25	6, 10	3, 5, 6	203.2	254	6	3/8" - 16
350	25	6	3, 5, 6	--	--		--
400	25	6	3, 5, 6	--	--		--

Other sizes available.

How to Order: Form, "D" x "W" x "X", Superabrasive type, Grit Size, Grade, Concentration, Bond, "H", "T", "I" and "Nd".

Order Example: 2A2T 250x10x3 D80R100B455P4 H = 203,20, T = 25, I = 228,6, Nd = (6) x 3/8" - 16
2A2T 280x25x3 B80R100B314K6 H = 228,60, T = 32, I = 254,0, Nd = (6) x 3/8" - 16

Acot:mm

3A1

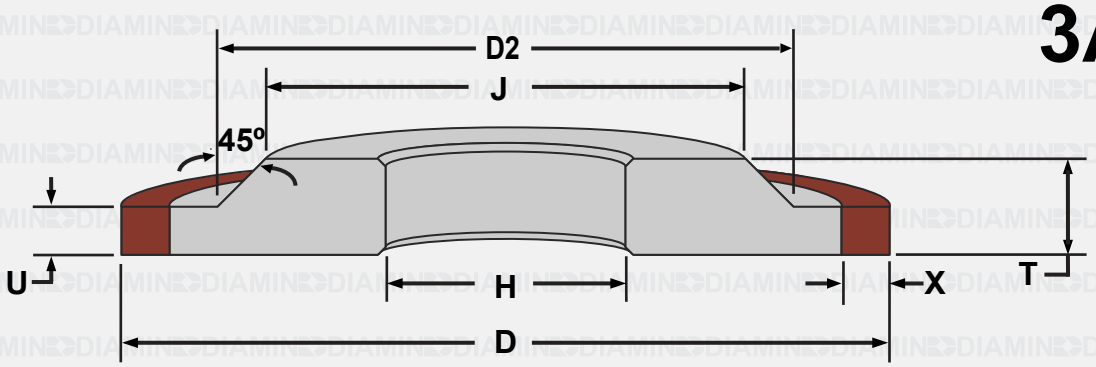

D	T	U	X	H	J	D2
50	6	1.0	3	--	30	35
50	6	1.5	3	--	30	35
50	6	2.0	3	--	30	35
50	6	2.5	3	--	30	35
50	6	3.0	3	--	30	35
60	6	1.0	3	--	35	40
60	6	1.5	3	--	35	40
60	6	2.0	3	--	35	40
60	6	2.5	3	--	35	40
60	6	3.0	3	--	35	40
75	6	1.0	3	--	42	50
75	6	1.5	3	--	42	50
75	6	2.0	3	--	42	50
75	6	2.5	3	--	43	50
75	6	3.0	3, 5	--	44	50
100	6	1.0	3	--	60	70
100	6	1.5	3	--	61	70
100	6	2.0	3	--	62	70
100	6	2.5	3	--	63	70
100	6	3.0	3, 5, 6	--	64	70

How to Order: Form, "D" x "U" x "X", Superabrasive type, Grit Size, Grade, Concentration, Bond, "H" and "T".

Order Example: 3A1 150x1,5x3 D80R100B455P4 H = 25,00, T = 6
3A1 200x3x3 B120R100B314K6 H = 32,00, T = 13

Acot:mm

3A1

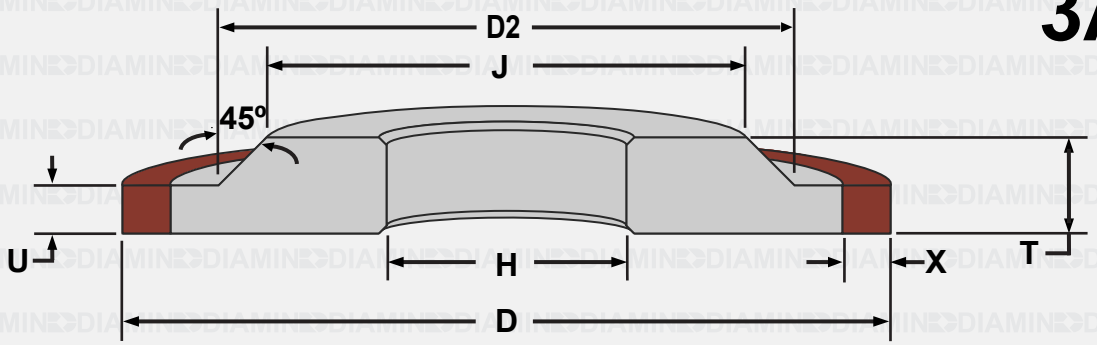

D	T	U	X	H	J	D2
125	6	1.0	3	--	85	95
125	6	1.5	3	--	86	95
125	6	2.0	3	--	87	95
125	6	2.5	3	--	88	95
125	6	3.0	3, 5, 6	--	89	95
150	6	1.0	3	--	100	110
150	6	1.5	3	--	101	110
150	6	2.0	3	--	102	110
150	6	2.5	3	--	103	110
150	6	3.0	3, 5, 6	--	104	110
175	6	1.5	3	--	131	140
175	6	2.0	3	--	132	140
175	6	2.5	3	--	133	140
175	6	3.0	3, 5, 6	--	134	140
175	6	4.0	3, 5, 6	--	136	140
200	10	1.5	3	--	135	152
200	10	2.0	3	--	136	152
200	10	2.5	3	--	137	152
200	10	3.0	3, 5, 6	--	138	152
200	10	4.0	3, 5, 6	--	140	152
200	10	5.0	3, 5, 6	--	142	152

How to Order: Form, "D" x "U" x "X", Superabrasive type, Grit Size, Grade, Concentration, Bond, "H" and "T".

Order Example: 3A1 150x1,5x3 D80R100B455P4 H = 25,00, T = 6
3A1 200x3x3 B120R100B314K6 H = 32,00, T = 13

Acot:mm

3A1

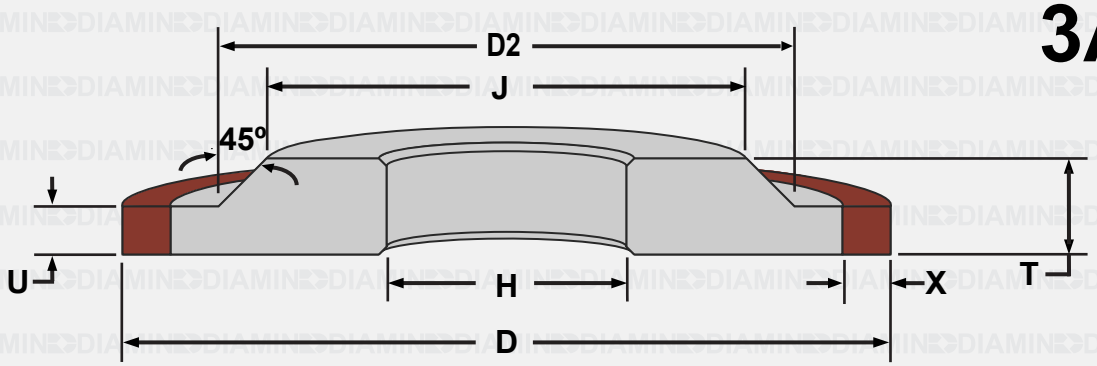

D	T	U	X	H	J	D2
250	13	2.0	3	--	178	200
250	13	2.5	3	--	179	200
250	13	3.0	3, 6	--	180	200
250	13	6.0	3, 6	--	186	200
300	13	2.0	3	--	238	260
300	13	3.0	3	--	240	260
300	13	4.0	3	--	242	260
300	13	5.0	3, 6	--	244	260
300	13	6.0	3, 6	--	246	260
350	13	2.0	3	--	288	310
350	13	3.0	3	--	290	310
350	13	4.0	3	--	292	310
350	13	5.0	3, 6	--	294	310
350	13	6.0	3, 6	--	296	310
400	13	2.0	3	--	338	360
400	13	3.0	3	--	340	360
400	13	4.0	3	--	342	360
400	13	5.0	3, 6	--	344	360
400	13	6.0	3, 6	--	346	360

Other sizes available.

How to Order: Form, "D" x "U" x "X", Superabrasive type, Grit Size, Grade, Concentration, Bond, "H" and "T".

Order Example: 3A1 150x1,5x3 D80R100B455P4 H = 25,00, T = 6
3A1 200x3x3 B120R100B314K6 H = 32,00, T = 13

Acot:mm

3F1

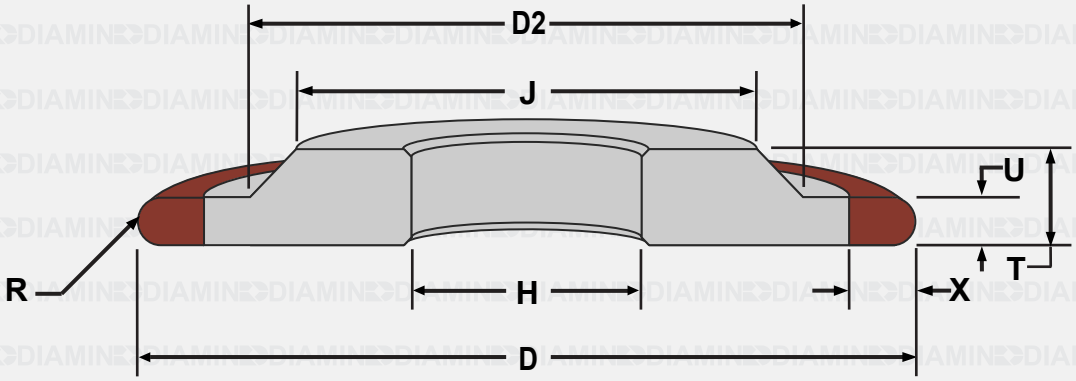

3V1

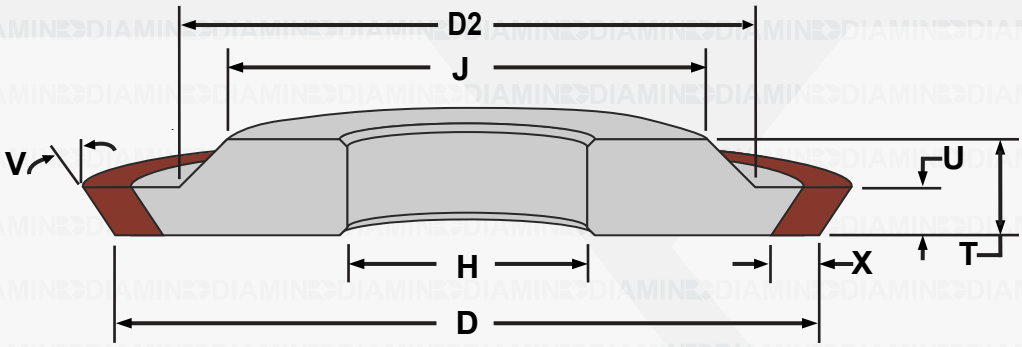

Other sizes available.

4A2

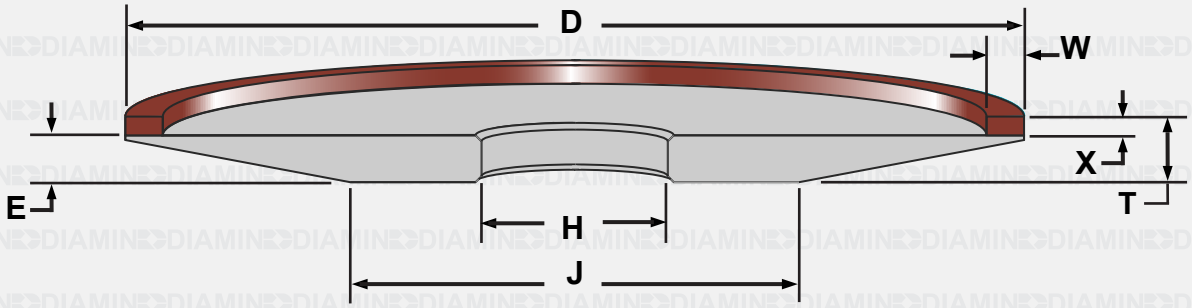

D	T	W	X	H	E	J
75		3, 5, 6, 8, 10	2, 3, 5, 6	--	7	35
100		3, 5, 6, 8, 10	2, 3, 5, 6	--	7	66
150		3, 5, 6, 8, 10	2, 3, 5, 6	--	7	75
175		3, 5, 6, 8, 10	2, 3, 5, 6	--	7	125
200		3, 5, 6, 8, 10	2, 3, 5, 6	--	9	95
250		3, 6	2, 3, 5, 6	--	10	95

Other sizes available.

How to Order: Form, "D" x "W" x "X", Superabrasive type, Grit Size, Grade, Concentration, Bond, "H" and "E".

Order Example: 4A2 150x5x3 D80R100B455P4 H = 20,00, E = 7
4A2 200x10x3 B120R100B314K6 H = 31,75, E = 9

Acot:mm

4A2P

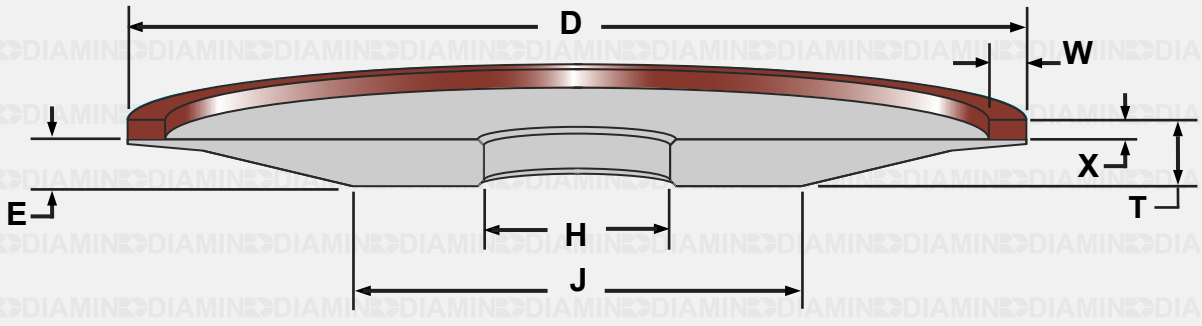

D	T	W	X	H	E	J
100		3, 5, 6, 8, 10	2, 3	--	7	66
125		3, 5, 6, 8, 10	2, 3	--	7	62
150		3, 5, 6, 8, 10	2, 3	--	7	75
175		3, 5, 6, 8, 10	2, 3	--	7	125

Other sizes available.

How to Order: Form, "D" x "W" x "X", Superabrasive type, Grit Size, Grade, Concentration, Bond, "H" and "E".

Order Example: 4A2P 150x5x3 D80R100B455P4 H = 20,00, E = 7
4A2P 100x6x2 B120R100B314K6 H = 31,75, E = 7

Acot:mm

4V2
(12V2)

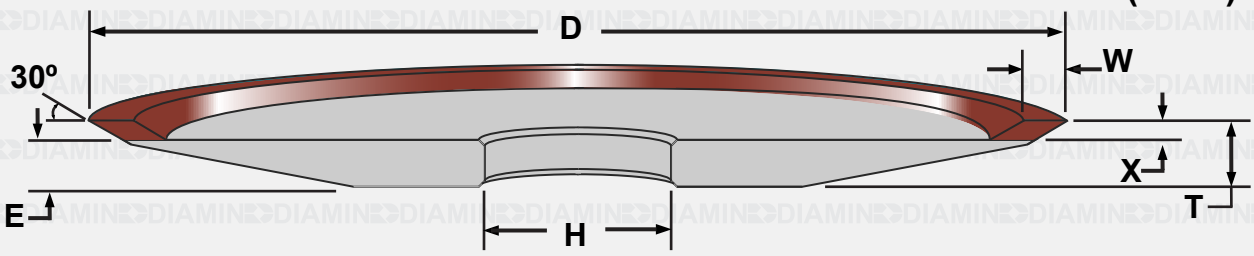

D	T	W	X	H	E
75	10	3	2	--	8
75	7	4	2	--	5
75	10	6	2	--	8
100	10	4	2	--	8
100	13	4	2	--	10
100	10	6	2	--	8
125	13	4	2	--	11
125	13	6	2	--	11
150	13	4	2	--	11
150	13	6	2	--	11
175	13	4	2	--	11
175	13	6	2	--	11
200	13	4	2	--	11
200	13	6	2	--	11

Other sizes available.

How to Order: Form, "D" x "W" x "X", Superabrasive type, Grit Size, Grade, Concentration, Bond, "H" and "T".

Order Example: 4V2 125x4x2 D80R100B455P4z H = 20,00, T = 13
4V2 150x6x2 B120R100B314K6 H = 31,75, T = 13

Acot:mm

6A2

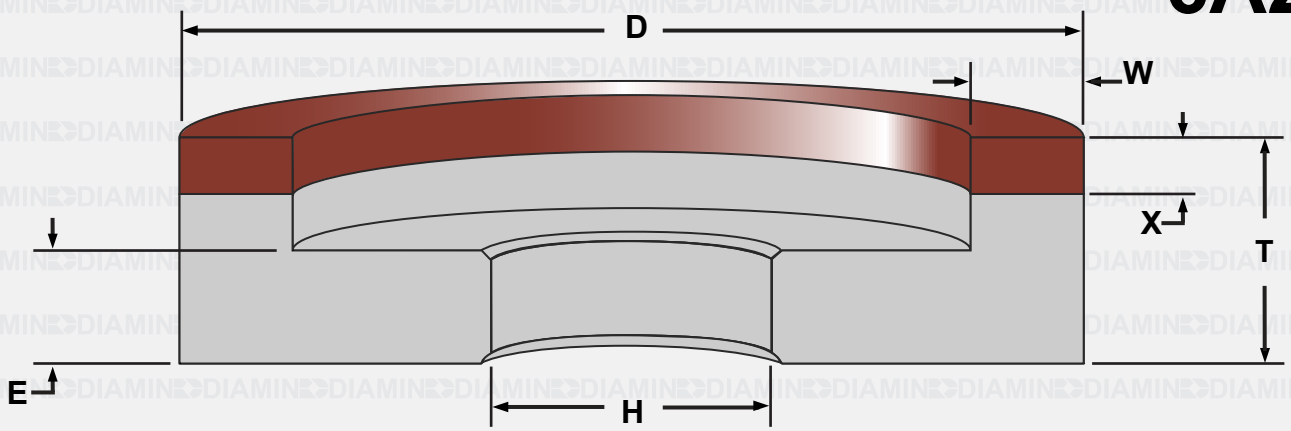

D	T	W	X	H	E
50	20	3, 5, 6, 8	3, 5, 6	--	5
75	20	3, 5, 6, 8	3, 5, 6	--	7
100	20	3, 5, 6, 8, 10, 13, 19	3, 5, 6	--	7, 10
125	25	3, 5, 6, 8, 10, 12, 15, 19, 27	3, 5, 6	--	10
150	20	3, 5, 6, 8, 10, 12, 15, 20, 25	3, 5, 6	--	10
175	25	3, 5, 6,10, 12,19	3, 5, 6	--	10
200	35	3, 5, 6, 8, 10, 12, 19	3	--	13
250	35	3, 6, 10	3, 5, 6	--	13
300	35	3, 6, 10	3, 5, 6	--	15
350	35	3, 6, 10	3, 5, 6	--	15
400	35	3, 6, 10	3, 5, 6	--	15

Other sizes available.

How to Order: Form, "D" x "W" x "X", Superabrasive type, Grit Size, Grade, Concentration, Bond, "H", "T" and "E".

Order Example: 6A2 100x6x3 D80R100B455P4 H=25.4, T=20 E=10
6A2 150x10x6 B120R100B314K6 H=31.75, T=40 E=10

Acot:mm

6A2C

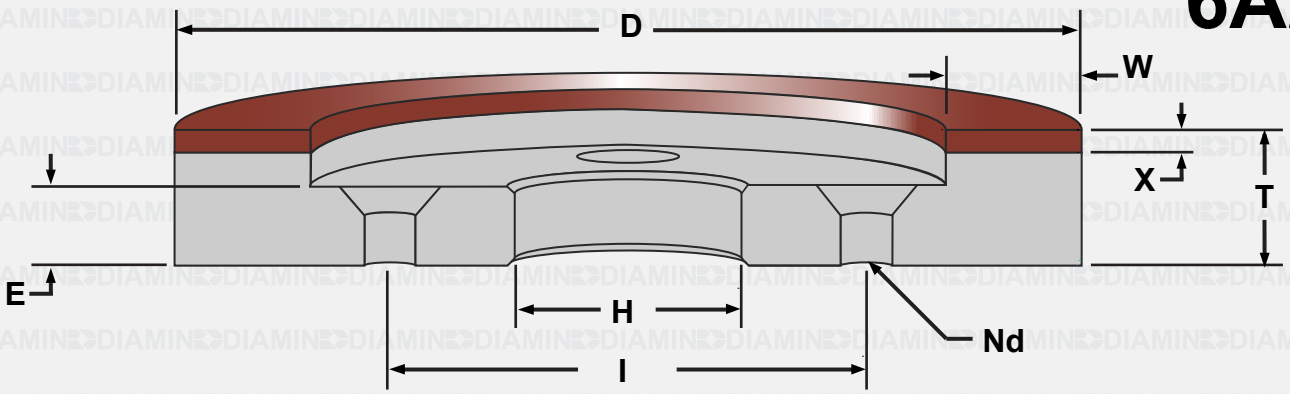

D	T	W	X	H	E	I	N	d
150	20	6, 10, 13	3, 5, 6	31.75	10	82.55	4	7.14
150	20	15, 19	3, 5, 6	31.75	10	82.55	4	7.14
150	32	6, 10, 13	3, 5, 6	31.75	10	82.55	4	7.14
150	32	15, 19	3, 5, 6	31.75	10	82.55	4	7.14
175	20	6, 10	3, 5, 6	31.75	10	82.55	4	7.14
175	20	19	3, 5, 6	31.75	10	82.55	4	7.14
175	25	6, 10	3, 5, 6	31.75	13	47.62	4	7.14
175	25	19	3, 5, 6	31.75	13	47.62	4	7.14
200	20	6, 10	3, 5, 6	31.75	10	82.55	4	7.14
200	20	19	3, 5, 6	31.75	10	82.55	4	7.14
250	25	6, 10	3, 5, 6	50.8	19	88.9	6	8.73

Other sizes available.

How to Order: Form, "D" x "W" x "X", Superabrasive type, Grit Size, Grade, Concentration, Bond, "H", "T", "E", "I" and "Nd".

Order Example: 6A2C 150x15x3 D80R100B455P4 H = 31,75, T = 32, I = 82,55, Nd = (4) x 7,14
6A2C 150x19x3 B80R100B314K6 H = 31,75, T = 20, I = 82,55, Nd = (4) x 7,14

Acot:mm

6A9

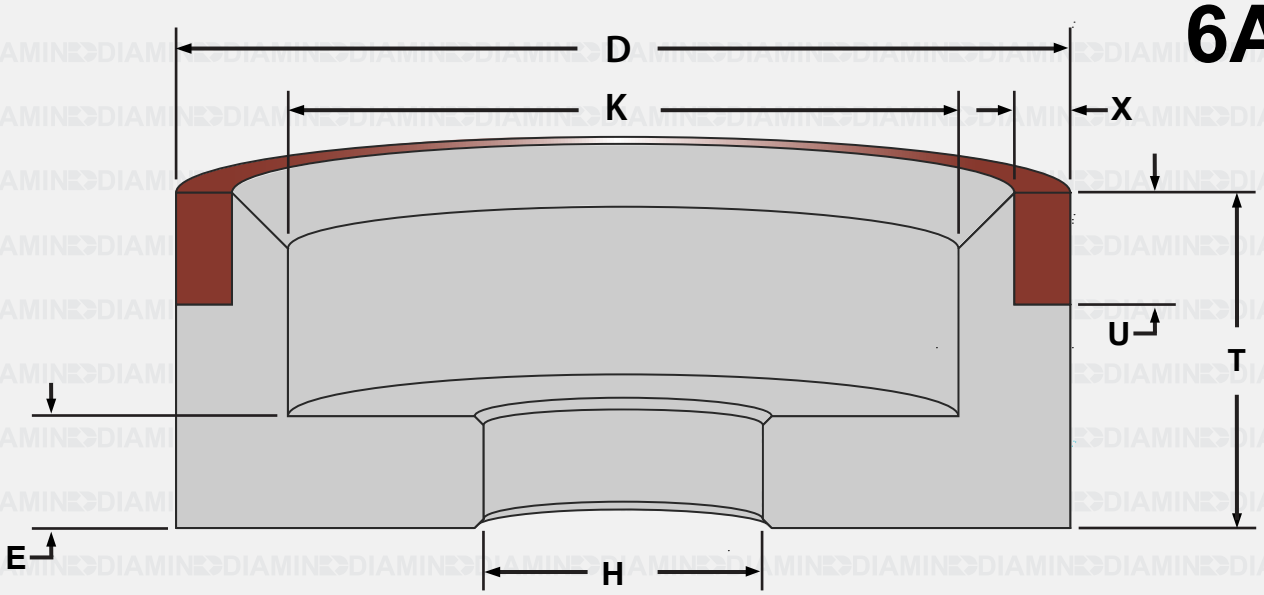

D	T	U	X	H	E	K
50	25	6	3	--	5	25
75	30	6	3, 5	--	7	55
100	35	6, 10	3, 5, 6	--	10	75
125	40	6, 10	3, 5, 6	--	10	100
150	40	6, 10	3, 5, 6	--	10	125
175	40	6, 10	3, 5, 6	--	10	150
200	40	6, 10	3, 5, 6	--	10	175

Other sizes available.

How to Order: Form, "D" x "U" x "X", Superabrasive type, Grit Size, Grade, Concentration, Bond, "H" and "T".

Order Example: 6A9 100x6x3 D80R100B455P4 H = 20,00, T = 35
6A9 125x10x3 B120R100B314K6 H = 31,75, T = 40

Acot:mm

9A3

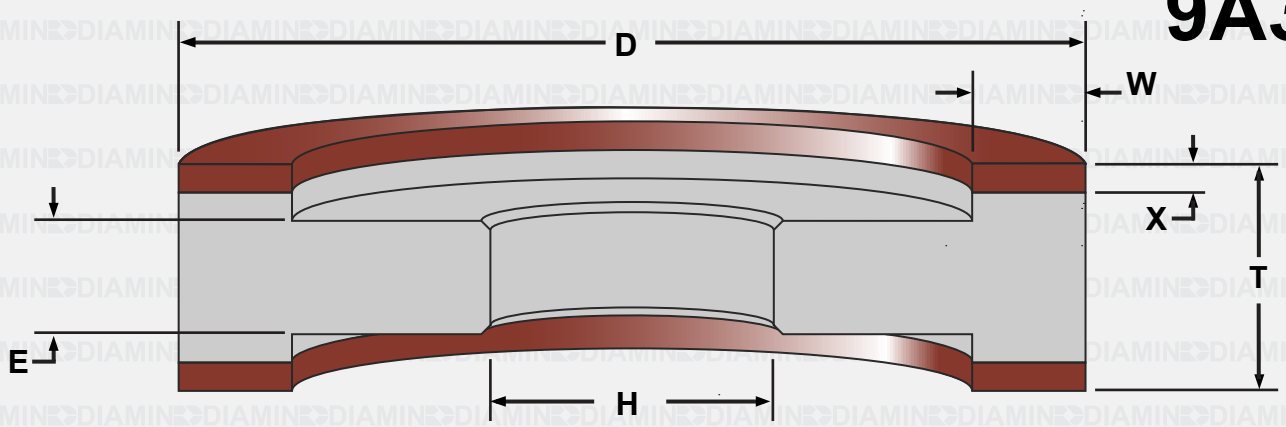

D	T	W	X	H	E
75	25	3, 6, 10	3	--	10
75	25	6, 10	5, 6	--	10
100	25	3, 6, 10	3	--	10
100	25	6, 10	5, 6	--	10
125	25	3, 6, 10	3	--	10
125	25	5, 6, 8, 10, 13	5, 6	--	10
150	25	3	3	--	10
150	25	5, 6, 8, 10, 13	3, 5, 6	--	10
175	25	3	3	--	10
175	25	5, 6, 8, 10, 13	3, 5, 6	--	10

Other sizes available.

How to Order: Form, "D" x "W" x "X", Superabrasive type, Grit Size, Grade, Concentration, Bond, "H" and "T".

Order Example: 9A3 125x10x3 D80R100B455P4 H = 31,75, T = 25
9A3 150x6x3 B12R100B314K6 H = 25,00, T = 25

Acot:mm

9A3H

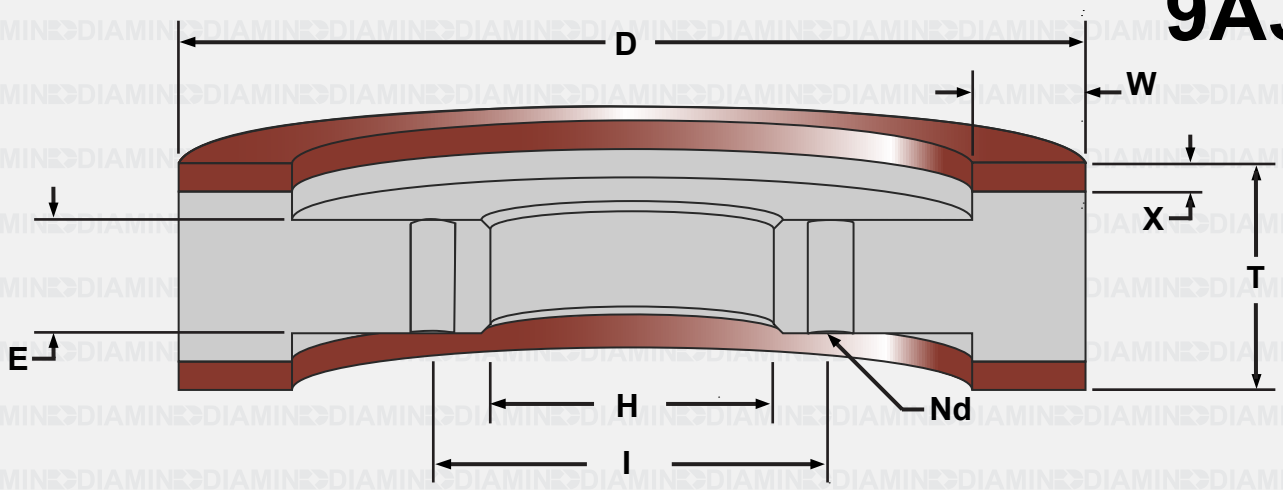

D	T	W	X	H	E	I	N	d
150	25	3	3	--	10	44.45	3	5,16
150	25	5, 6, 8, 10, 12	3, 5, 6	--	10	44.45	3	5,16
175	25	3	3	--	10	44.45	3	5,16
175	25	5, 6, 8, 10, 12	3, 5, 6	--	10	44.45	3	5,16

Other sizes available.

How to Order: Form, "D" x "W" x "X", Superabrasive type, Grit Size, Grade, Concentration, Bond, "H", "T", "I" and "Nd".

Order Example: 9A3H 175x8x3 D14R100B455P4 H = 31,75, T = 25, I = 44,45, Nd = (3) x 5,16
9A3H 150x6x3 B80R100B314K6 H = 25,00, T = 25, I = 44,45, Nd = (3) x 5,16

Acot:mm

11A2

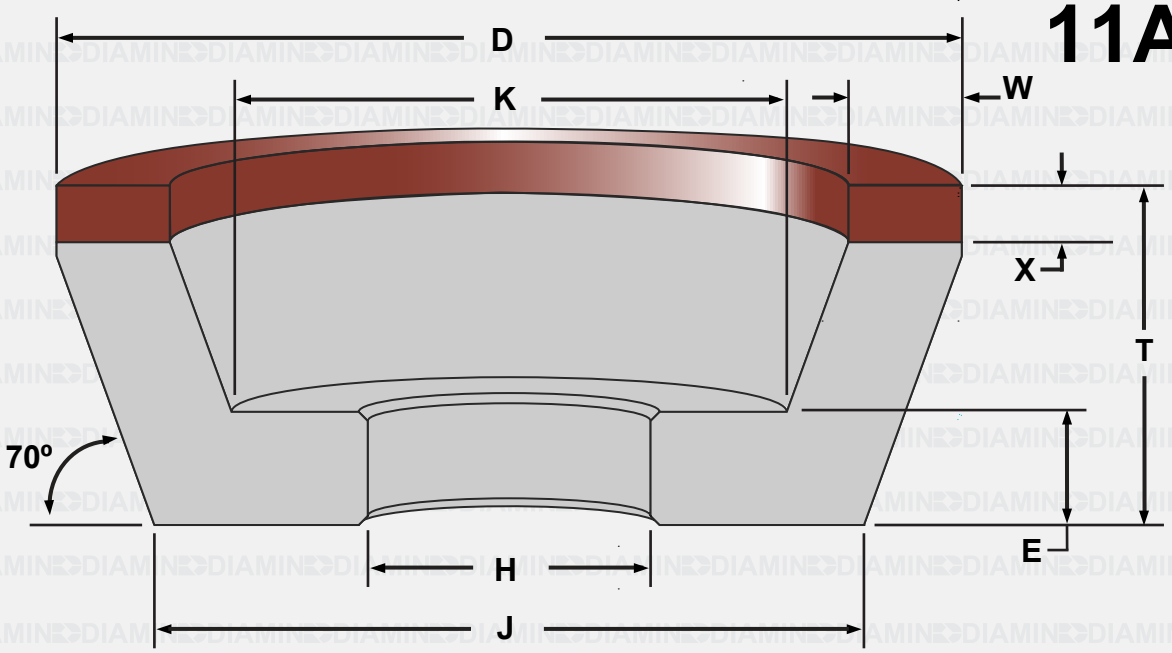

D	T - X	W	X	H	E	K	J
75	22	3, 5	3	--	10	55	60
75	22	6, 10, 13	3, 6	--	10	40	60
75	29	3, 5	3	--	10	50	54
75	29	6, 10, 13	3, 6	--	10	35	54
75	37	3, 5	3	--	10	44	49
75	37	6, 10, 13	3, 6	--	10	28	49
100	22	3, 5	3	--	10, 13	80	85
100	22	6, 10, 13	3, 6	--	10, 13	65	85
100	29	3, 5	3	--	10, 13	75	79
100	29	6, 10, 13	3, 6		10, 13	60	79
100	37	3, 5	3	--	10, 13	69	74
100	37	6, 10, 13	3, 6	--	10, 13	53	74

How to Order: Form, "D" x "W" x "X", Superabrasive type, Grit Size, Grade, Concentration, Bond, "H" "T" and "E".

Order Example: 11A2 100x10x6 D80R100B455P4 H=25.00, T=35 E=10
11A2 150x13x3 B120R100B314K6 H=31.75, T=40 E=13

Acot:mm

11A2

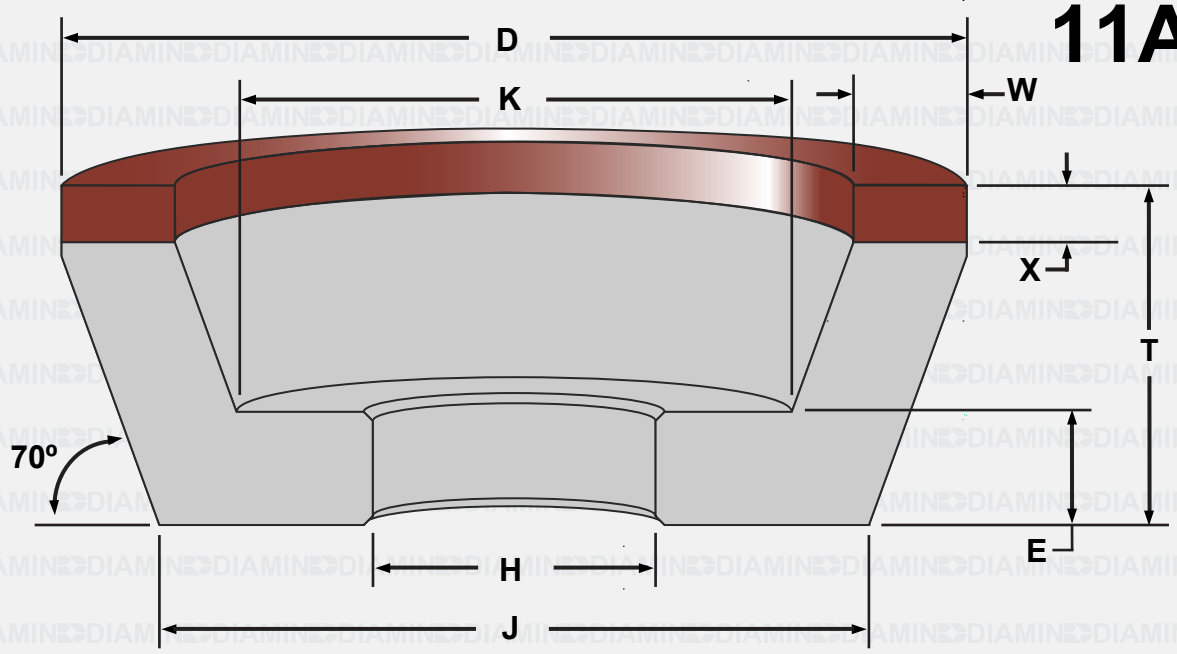

D	T - X	W	X	H	E	K	J
125	22	3, 5	3	--	10, 13	105	110
125	22	6, 10, 13	3, 6	--	10, 13	90	110
125	29	3, 5	3	--	10, 13	100	104
125	29	6, 10, 13	3, 6		10, 13	85	104
125	37	3, 5	3	--	10, 13	94	99
125	37	6, 10, 13	3, 6	--	10, 13	78	99
150	22	3, 5	3	--	10, 13	130	135
150	22	6, 10, 13	3, 6	--	10, 13	115	135
150	29	3, 5	3	--	10, 13	125	129
150	29	6, 10, 13	3, 6		10, 13	110	129
150	37	3, 5	3	--	10, 13	119	124
150	37	6, 10, 13	3, 6	--	10, 13	103	124

Other sizes available.

How to Order: Form, "D" x "W" x "X", Superabrasive type, Grit Size, Grade, Concentration, Bond, "H" "T" and "E".

Order Example: 11A2 100x10x6 D80R100B455P4 H=25.00, T=35 E=10
11A2 150x13x3 B120R100B314K6 H=31.75, T=40 E=13

Acot:mm

11V2

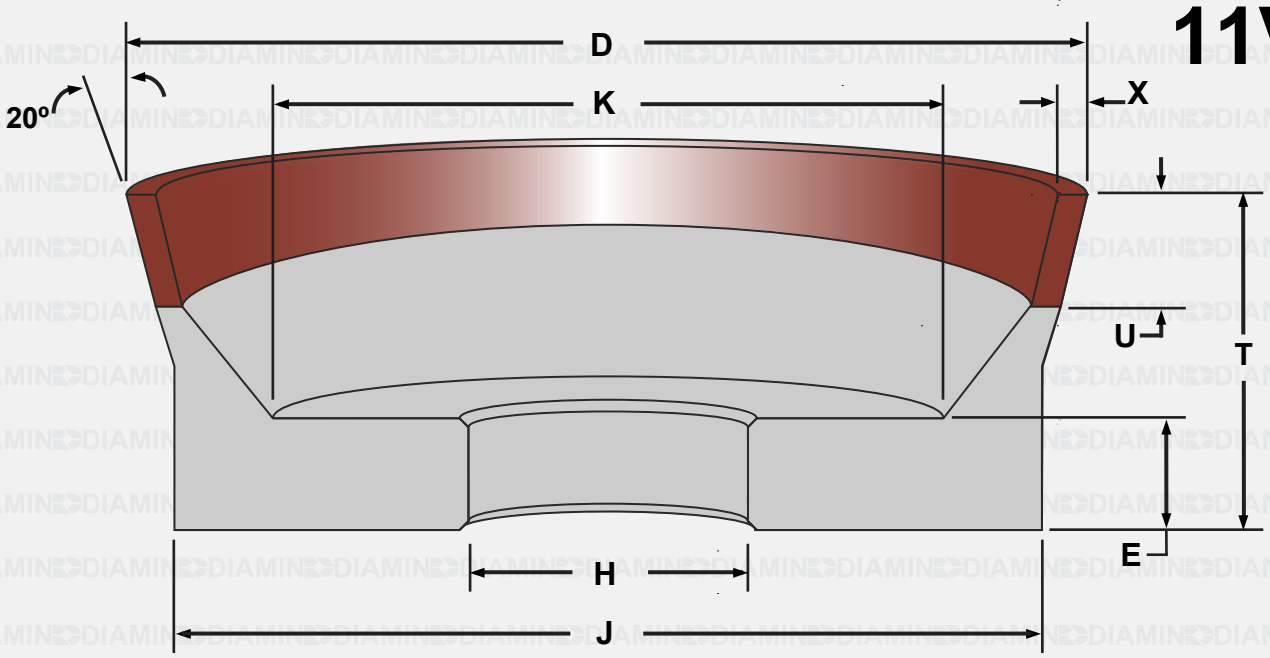

D	T	U	X	H
20	10	5	2	8
30	20	5	2	8
40	22	5	2	10

Other sizes available.

How to Order: Form, "D" x "U" x "X", Superabrasive type, Grit Size, Grade, Concentration, Bond, "H", "T" and "E".
Order Example: 11V2 40x5x2 B120R100B390R6 H = 10.00, T = 22 E=9

Acot:mm

11V2W

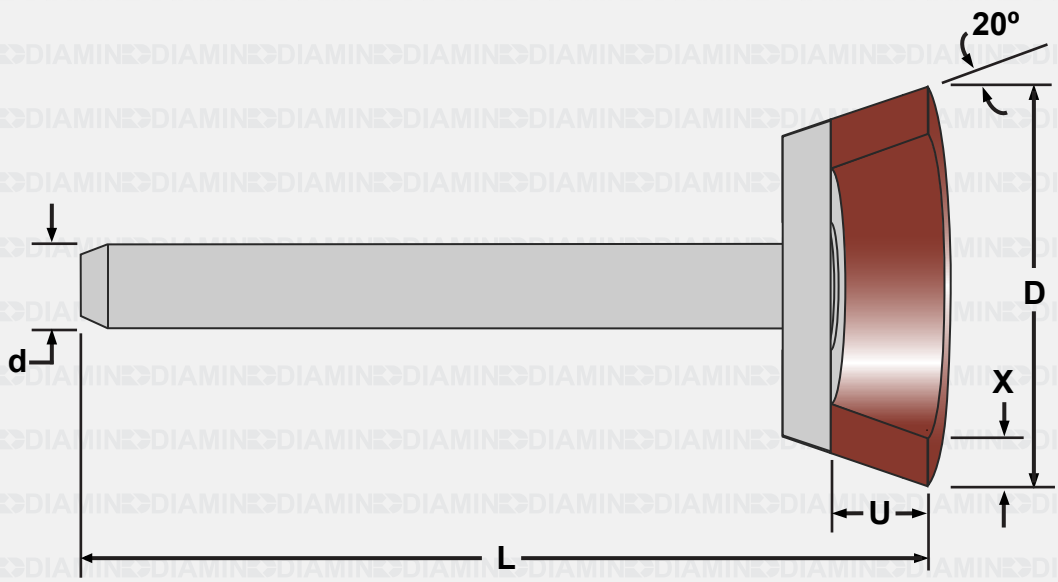

D	U	X	d	L
10	5	2	6.00	50
12	5	2	6.00	50
15	5	2	6.00	50

Other sizes available.

How to Order: Form, "D" x "U" x "X", Superabrasive type, Grit Size, Grade, Concentration, Bond, Shank diameter d and Shank length "L".

Order Example: 11V2W 15x5x2 B120R100B390R6 d = 6.00, L = 50

Acot:mm

11V5

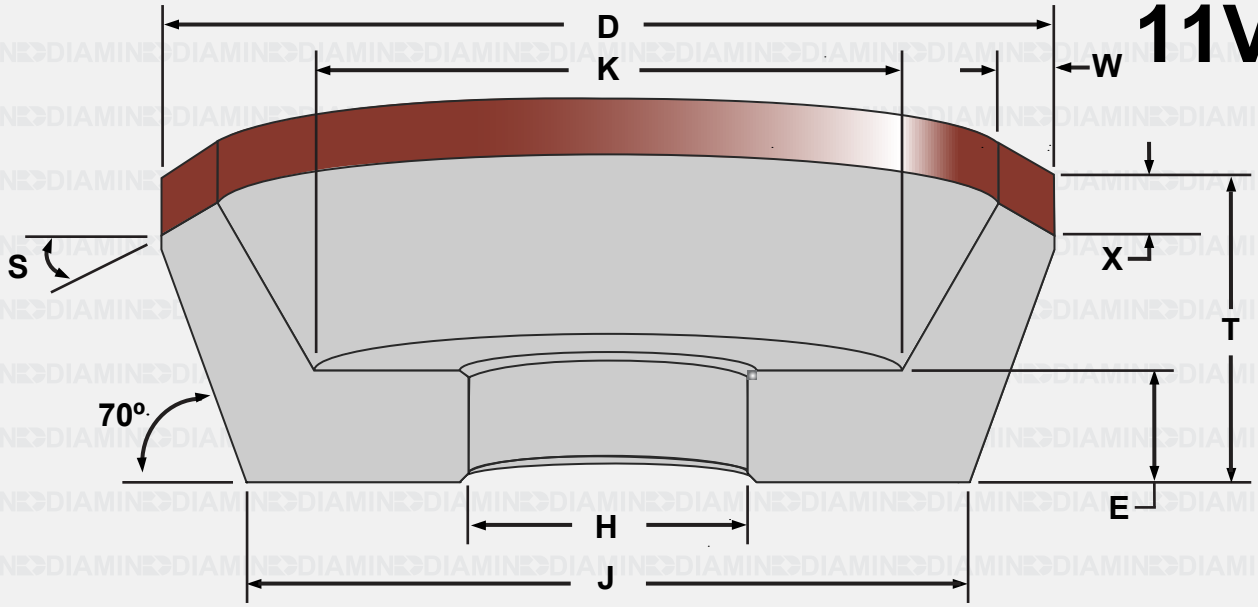

D	T	W	X	H	S	E	K	J
100	45	6	3	--	30º	10	65	71
100	45	6	6	--	30º	10	65	73
100	45	10	3	--	30º	10	65	71
100	45	10	6	--	30º	10	65	73
125	45	6	3	--	30º	10	90	96
125	45	6	6	--	30º	10	90	98
125	45	10	3	--	30º	10	90	96
125	45	10	6	--	30º	10	90	98

Other sizes available.

How to Order: Form, "D" x "W" x "X", Superabrasive type, Grit Size, Grade, Concentration, Bond, "H" "T" and "S".

Order Example: 11V5 100x6x6 D80R100B455P4 H=31,75, T=45 S=30º
11V5 125x10x6 B120R100B314K6 H=20,00, T=45 S=30º

Acot:mm

11V9

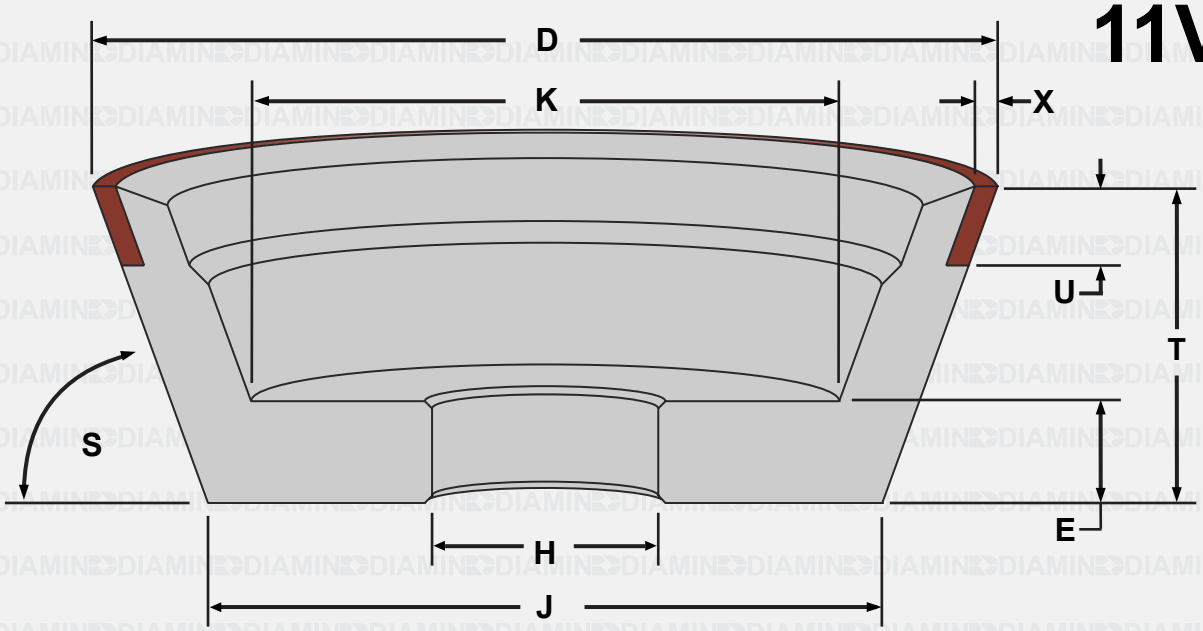

D	T	U	X	H	E	K	J	S
50	30	10	3	--	10	21	28	70º
75	35	10	3	--	9.5	40	49	70º
80	35	10	3	--	10	45	54	70º
95	38	10	3	--	10	60	67	70º
100	35	10	3	--	10	65	74	70º
100	35	10	5	--	10	61	74	70º
125	44	10	3	--	10	80	92	70º
125	44	10	5	--	10	76	92	70º
150	45	10	3	--	10	104	117	70º

Other sizes available.

How to Order: Form, "D" x "U" x "X", "S", Superabrasive type, Grit Size, Grade, Concentration, Bond, "H" "T" and "E".

Order Example: 11V9 75x10x3 D80R100B455P4 H=20.00, T=35 E=9,5
11V9 125x10x5 B120R100B314K6 H=31.75, T=44 E=10

Acot:mm

11A9

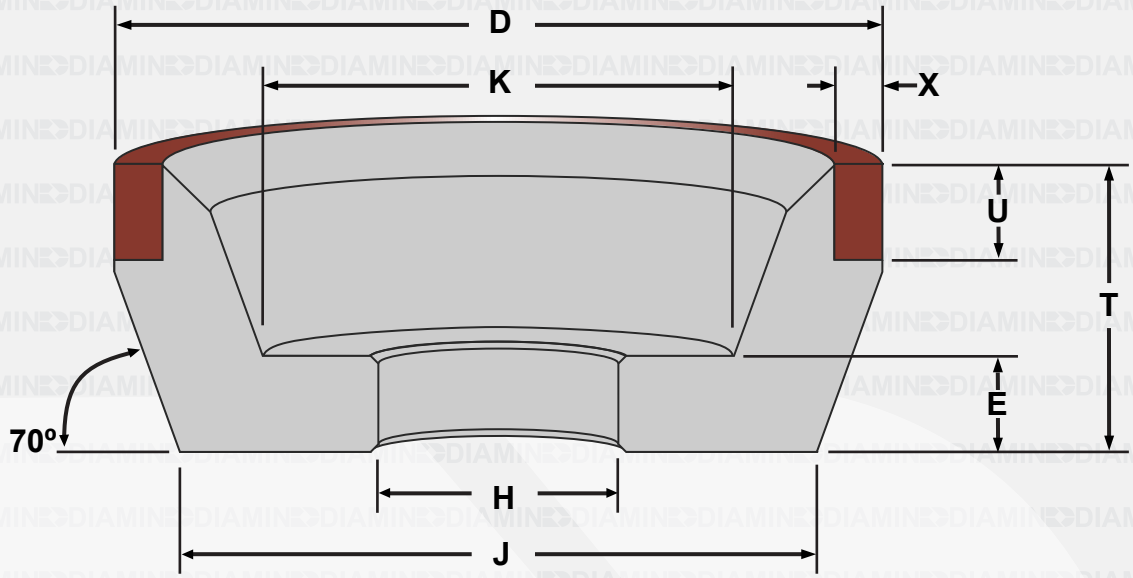

11V4

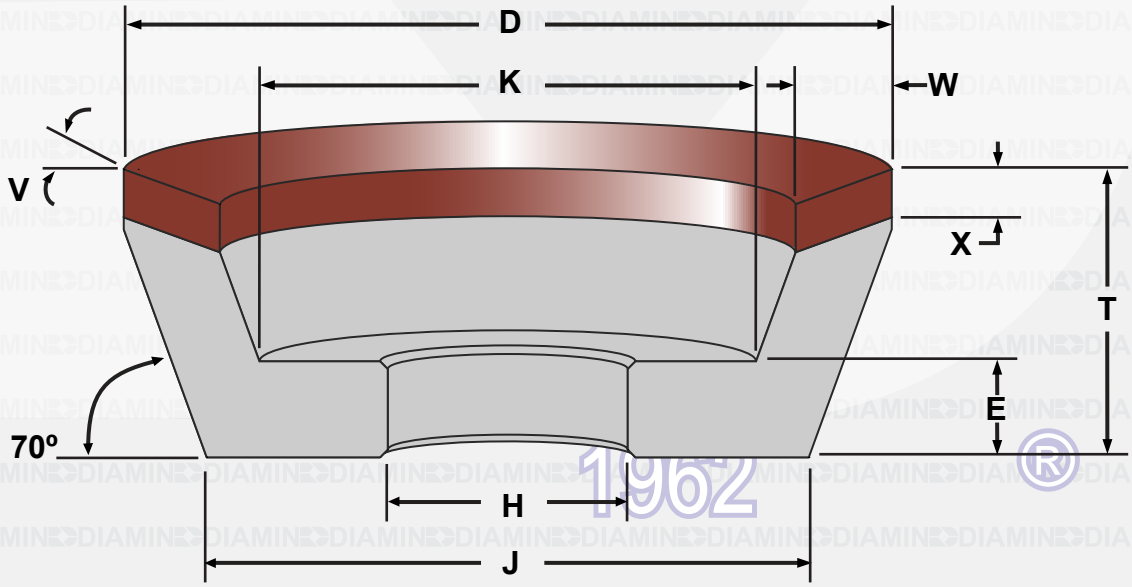

Other wheel shapes available on request.

12A2

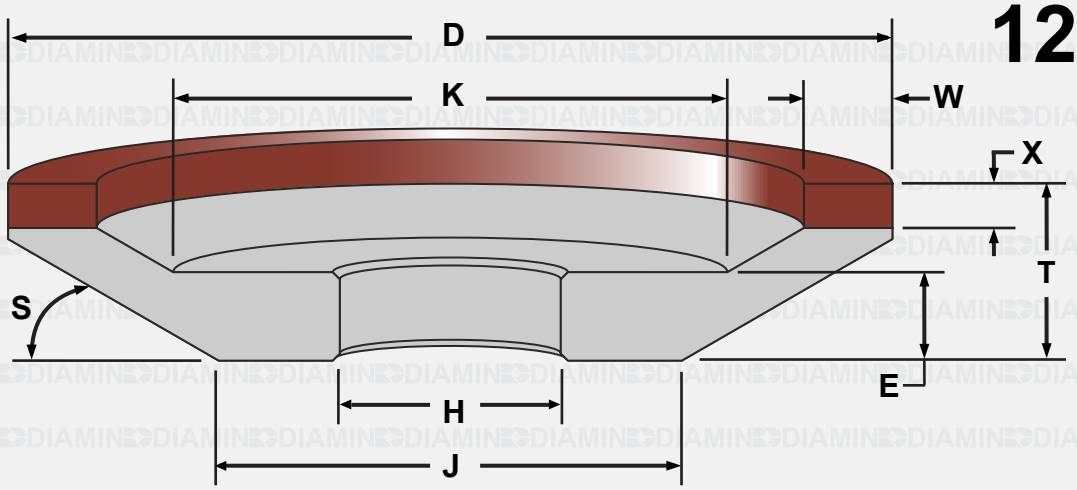

D	T - X	W	X	H	E	K	J	S
75	10	3	3	--	8	60	43	30º
75	10	5, 6	3, 5	--	8	54	43	30º
75	10	3	3	--	8	63	57	45º
75	10	5, 6	3, 5	--	8	57	57	45º
75	19	3, 5	3	--	10	45	39	45º
75	19	6, 10	3, 6	--	10	35	39	45º
100	10	3, 5	3	--	8	80	50	20º
100	10	6, 10, 13	3, 6	--	8	65	50	20º
100	11	3, 5	3	--	8	80	80	45º
100	11	6, 10, 13	3, 6	--	8	66	80	45º
100	20	3, 5	3	--	10	68	62	45º
100	20	6, 10, 13	3, 6	--	10	52	62	45º
125	13	3, 5	3	--	10	100	83	30º
125	13	6, 10, 13	3, 6	--	10	86	83	30º
125	13	3, 5	3	--	10	106	100	45º
125	13	6, 10, 13	3, 6	--	10	90	100	45º
125	20	3, 5	3	--	10	93	87	45º
125	20	6, 10, 13	3, 6	--	10	77	87	45º
150	13	3, 5	3	--	10	121	84	20º
150	13	6, 10, 13	3, 6	--	10	105	84	20º
150	22	3, 5	3	--	10	96	77	30º
150	22	6, 10, 13	3, 6	--	10	80	77	30º
150	22	3, 5	3	--	10	114	108	45º
150	22	6, 10, 13	3, 6	--	10	98	108	45º

How to Order: Form, "D" x "W" x "X", Superabrasive type, Grit Size, Grade, Concentration, Bond, "H" "T" and "S".

Order Example: 12A2 150x10x6 D80R100B455P4 H=31,75, T=28 S=45º
12A2 200x13x3 B120R100B314K6 H=31.75, T=25 S=30º

Acot:mm

12A2

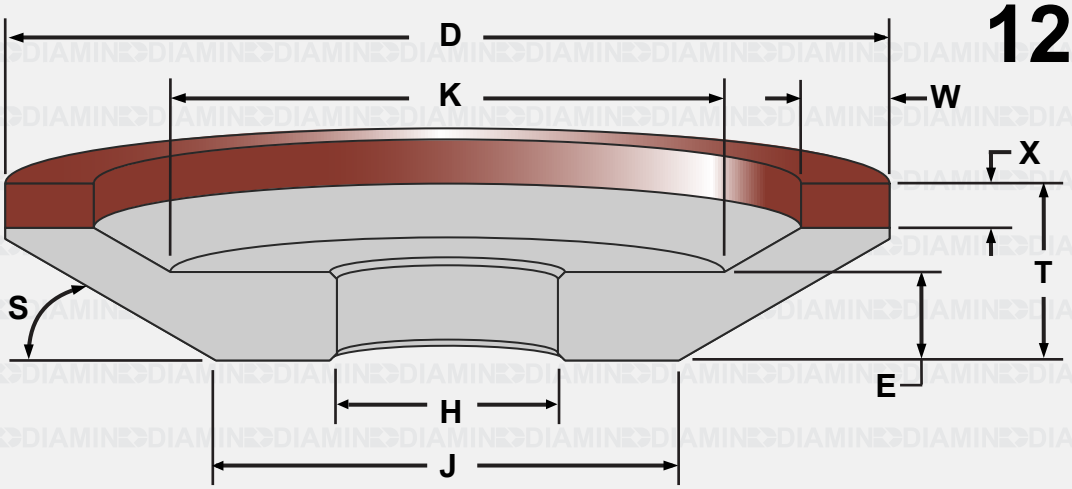

D	T - X	W	X	H	E	K	J	S
175	22	3, 5	3	--	10	121	102	30º
175	22	6, 10, 13	3, 6	--	10	105	102	30º
175	22	3, 5	3	--	10	139	133	45º
175	22	6, 10, 13	3, 6	--	10	123	133	45º
200	22	3, 5	3	--	10	171	127	30º
200	22	6, 10, 13	3, 6	--	10	155	127	30º
200	22	3, 5	3	--	10	164	158	45º
200	22	6, 10, 13	3, 6	--	10	148	158	45º

Other sizes available.

How to Order: Form, "D" x "W" x "X", Superabrasive type, Grit Size, Grade, Concentration, Bond, "H", "T" and "S".

Order Example: 12A2 150x10x6 D80R100B455P4 H=31,75, T=28 S=45º
12A2 200x13x3 B120R100B314K6 H=31.75, T=25 S=30º

Acot:mm

12V9

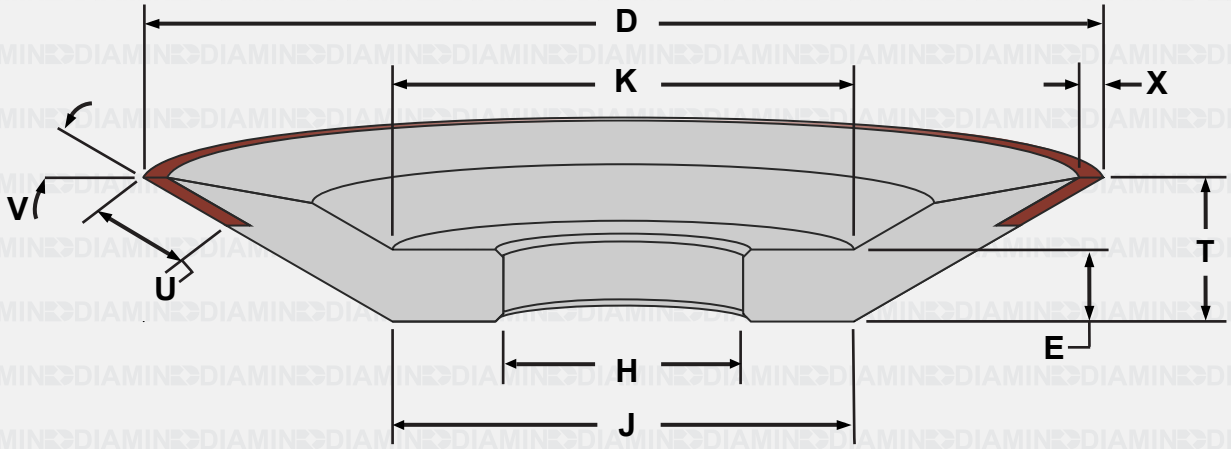

D	T	U	X	H	E	K	J	V
50	20	6	3	--	10	20	22	45°
50	20	6	3	--	10	20	22	45º
75	13	6	3	--	8	47	29	30º
75	13	6	5	--	7	29	29	30º
75	13	13	3	--	6.5	38	29	30º
75	19	13	3	--	8	38	37	45°
75	19	13	3	--	8	38	37	45°
75	19	13	3	--	8	38	37	45º
100	11	8	3	--	6	56	61.5	30º
100	13	13	3	--	7	56	54.5	30º
100	22	13	3	--	9	57	56	45°
100	22	13	3	--	9	57	56	45º
125	13	13	3	--	10	60	71	20º
125	13	13	2.6	--	11	65	67	25º
125	17	15	3	--	9.5	73	66	30º
125	25	13	1, 2, 3	--	10	80	74	45°
125	25	13	1, 2, 3	--	10	80	74	45º

Other sizes available.

How to Order: Form, "D" x "U" x "X", Superabrasive type, Grit Size, Grade, Concentration, Bond, "H", "T" and "V".

Order Example: 12V9 100x13x3 D80R100B455P4 H=20,00, T=22 V=45º
12V9 75x6x3 B120R100B314K6 H=20,00, T=13 S=30º

Acot:mm

12V9

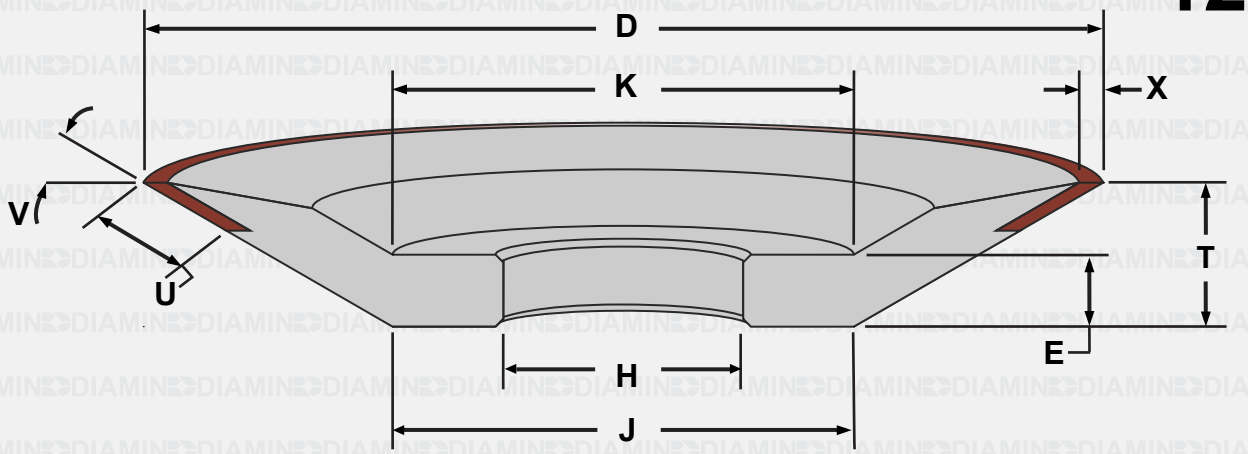

D	T	U	X	H	E	K	J	V
150	13	13	2.6	--	11	90	97	25º
150	20	13	3, 5	--	10	85.61	80	30º
150	20	13	3, 5	--	10	85.61	110	45º
200	13	13	2.6	--	11	140	142	25º

Other sizes available.

How to Order: Form, "D" x "U" x "X", Superabrasive type, Grit Size, Grade, Concentration, Bond, "H", "T" and "V".

Order Example: 12V9 100x13x3 D80R100B455P4 H=20,00, T=22 V=45º
12V9 75x6x3 B120R100B314K6 H=20,00, T=13 S=30º

Acot:mm

12V4

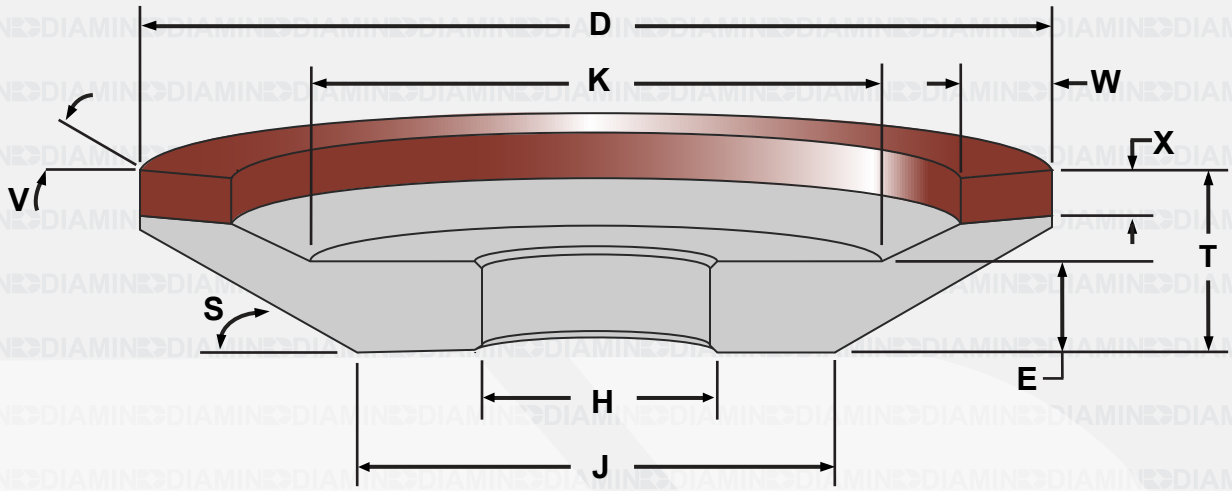

12V5

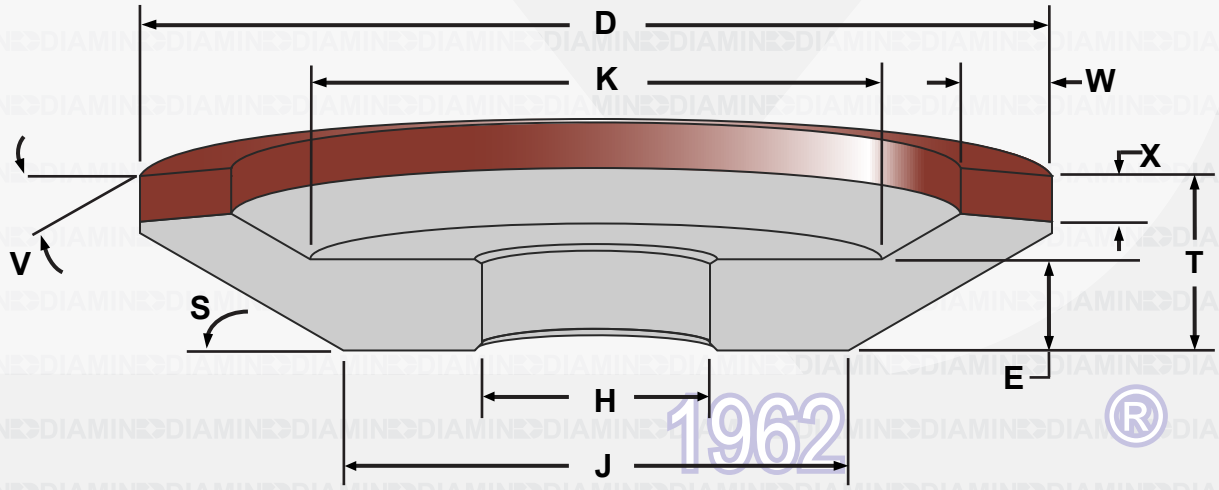

Other wheel shapes available on request.

14A1

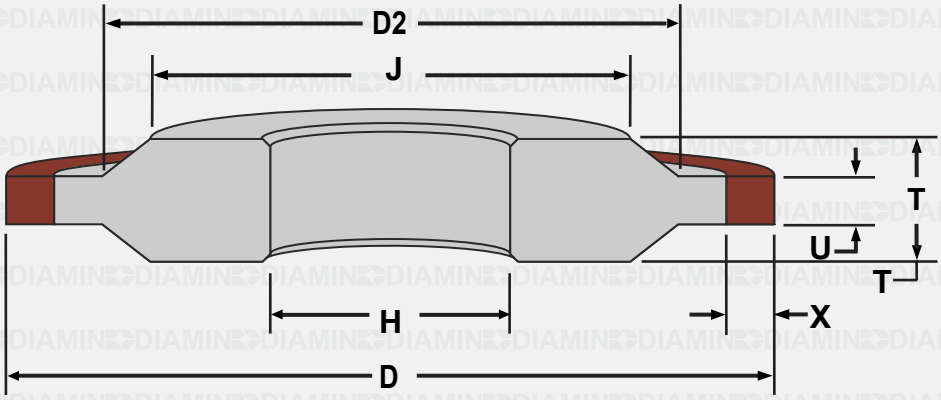

D	T	U	X	H	J	D2
50	6	1.0	3	--	30	35
50	6	1.5	3	--	30.5	35
50	6	2.0	3	--	31	35
50	6	2.5	3	--	31.5	35
50	6	3.0	3	--	32	35
60	6	1.0	3	--	35	40
60	6	1.5	3	--	35.5	40
60	6	2.0	3	--	36	40
60	6	2.5	3	--	36.5	40
60	6	3.0	3	--	37	40
75	6	1.0	3	--	45	50
75	6	1.5	3	--	45.5	50
75	6	2.0	3	--	46	50
75	6	2.5	3	--	46.5	50
75	6	3.0	3, 5	--	47	50
100	6	1.0	3	--	65	70
100	6	1.5	3	--	65.5	70
100	6	2.0	3	--	66	70
100	6	2.5	3	--	66.5	70
100	6	3.0	3, 5, 6	--	67	70

How to Order: Form, "D" x "U" x "X", Superabrasive type, Grit Size, Grade, Concentration, Bond, "H", "T" and "J".
Order Example: 14A1 150x3x3 D80R100B455P4 H = 25,40, T = 6
14A1 100x1,5x3 B120R100B314K6 H = 20,00, T = 6

Acot:mm

14A1

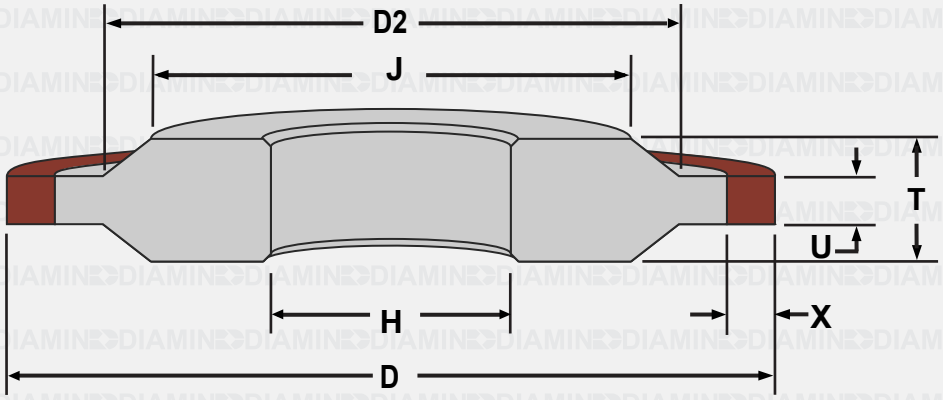

D	T	U	X	H	J	D2
125	6	1.0	3	--	90	95
125	6	1.5	3	--	90.5	95
125	6	2.0	3	--	91	95
125	6	2.5	3	--	91.5	95
125	6	3.0	3, 5, 6	--	92	95
150	6	1.0	3	--	105	110
150	6	1.5	3	--	105.5	110
150	6	2.0	3	--	106	110
150	6	2.5	3	--	106.5	110
150	6	3.0	3, 5, 6	--	107	110
175	6	1.5	3	--	135.5	140
175	6	2.0	3	--	136	140
175	6	2.5	3	--	136.5	140
175	6	3.0	3, 5, 6	--	137	140
175	6	4.0	3, 5, 6	--	138	140
200	10	1.5	3	--	143.5	152
200	10	2.0	3	--	144	152
200	10	2.5	3	--	144.5	152
200	10	3.0	3, 5, 6	--	145	152
200	10	4.0	3, 5, 6	--	146	152

How to Order: Form, "D" x "U" x "X", Superabrasive type, Grit Size, Grade, Concentration, Bond, "H", "T" and "J".

Order Example: 14A1 150x3x3 D80R100B455P4 H = 25,40, T = 6
14A1 100x1,5x3 B120R100B314K6 H = 20,00, T = 6

Acot:mm

14A1

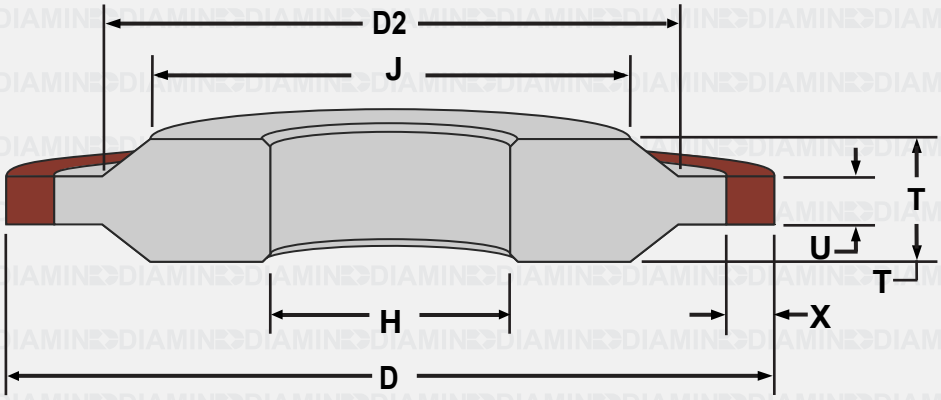

D	T	U	X	H	J	D2
250	13	2.0	3	--	189	200
250	13	2.5	3	--	189.5	200
250	13	3.0	3, 6	--	190	200
250	13	6.0	3, 6	--	193	200
300	13	2.0	3	--	249	260
300	13	3.0	3	--	250	260
300	13	4.0	3	--	251	260
300	13	5.0	3, 6	--	252	260
300	13	6.0	3, 6	--	253	260
350	13	2.0	3	--	299	310
350	13	3.0	3	--	300	310
350	13	4.0	3	--	301	310
350	13	5.0	3	--	302	310
350	13	6.0	3, 6	--	303	310
400	13	2.0	3	--	349	360
400	13	3.0	3	--	350	360
400	13	4.0	3	--	351	360
400	13	5.0	3	--	352	360
400	13	6.0	3, 6	--	353	360

Other sizes available.

How to Order: Form, "D" x "U" x "X", Superabrasive type, Grit Size, Grade, Concentration, Bond, "H", "T" and "J".

Order Example: 14A1 150x3x3 D80R100B455P4 H = 25,40, T = 6
14A1 100x1,5x3 B120R100B314K6 H = 20,00, T = 6

Acot:mm

14F1

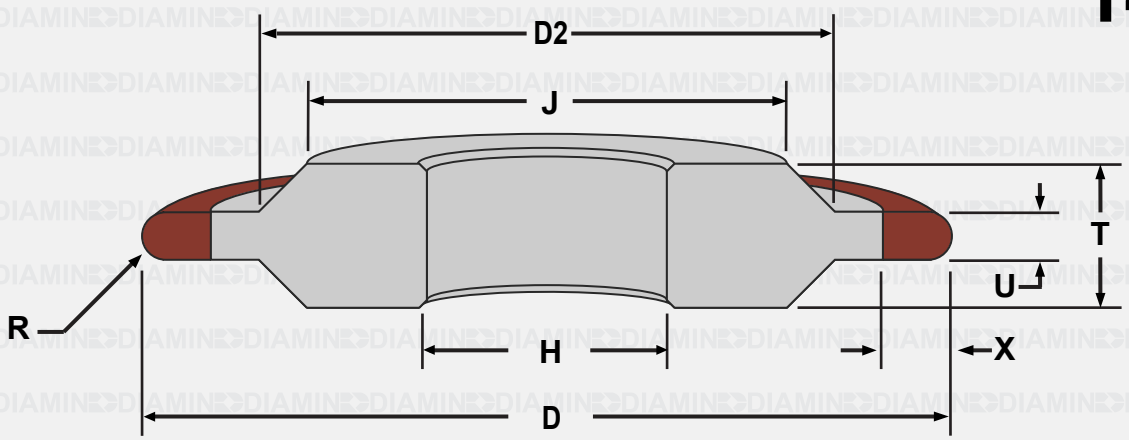

14V1

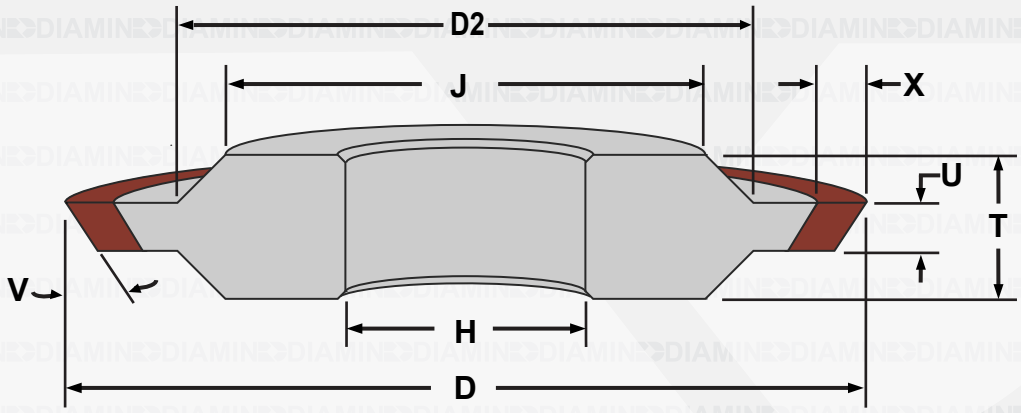

Other wheel shapes available on request.

15A2

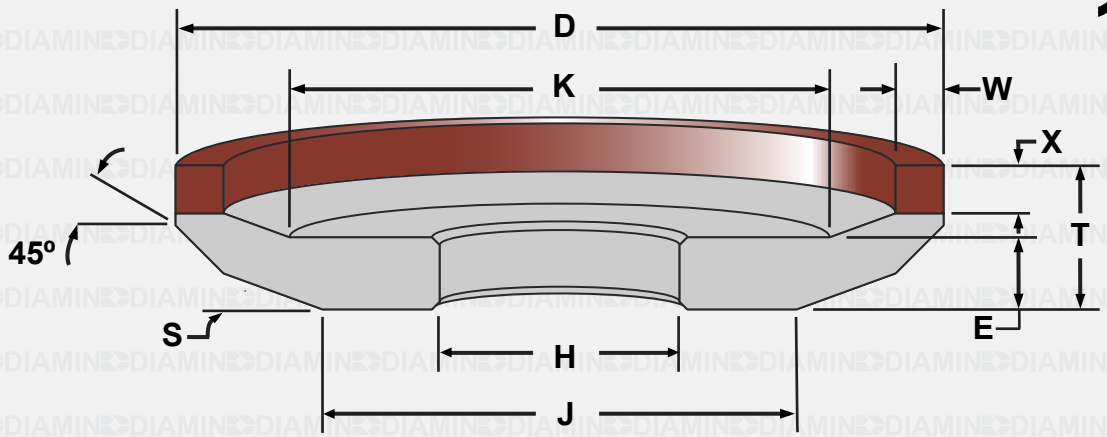

D	T	W	X	H	E	K	J
75	13	3, 5	3	--	7	44	44
75	13	6, 10, 13	3, 6	--	7	44	44
100	20	3, 5	3	--	8	50	50
100	20	6, 10, 13	3, 6	--	8	50	50
125	20	3, 5	3	--	10	60	60
125	20	6, 10, 13	3, 6	--	10	60	60
150	20	3, 5	3	--	10	80	80
150	20	6, 10, 13	3, 6	--	10	80	80

Other sizes available.

How to Order: Form, "D" x "W" x "X", Superabrasive type, Grit Size, Grade, Concentration, Bond, "H" and "T".
Order Example: 15A2 125x13x3 D80R100B455P4 H = 20,00, T = 20
15A2 150x13x3 B120R100B314K6 H = 31,75, T = 20

Acot:mm

15V9

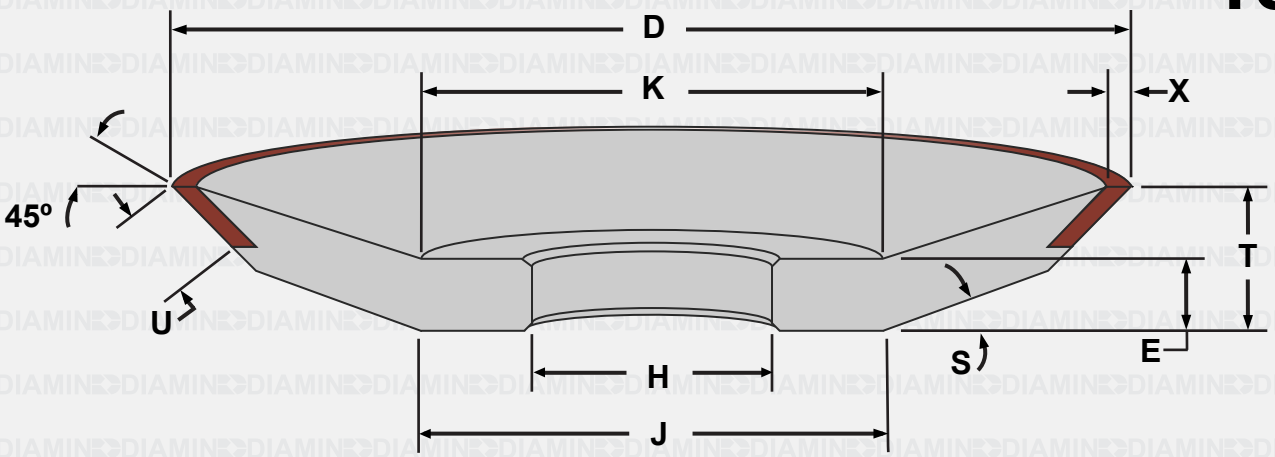

D	T	U	X	H	E	K	J
75	13	13	3	--	7	44	38
100	20	13	3	--	8	50	50
125	20	13	3	--	10	60	60
150	20	13	3	--	10	80	80

Other sizes available.

How to Order: Form, "D" x "U" x "X", Superabrasive type, Grit Size, Grade, Concentration, Bond, "H" and "T".

Order Example: 15V9 125x13x3 D80R100B455P4 H = 20,00, T = 20
15V9 150x13x3 B120R100B314K6 H = 31,75, T = 20

Acot:mm

DW

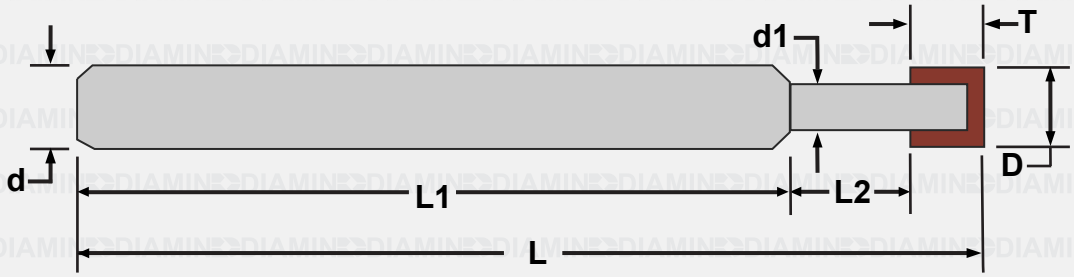

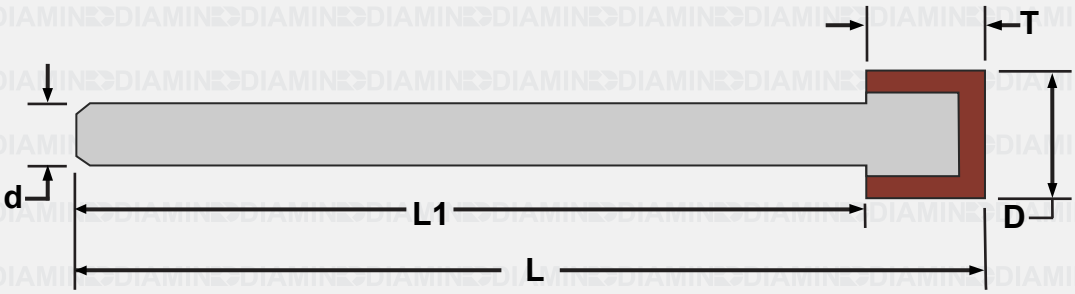

D	T	L	d
3	5	50	3.17
3	5	50	6.35
4	5	50	3.17
4	5	50	6.35
5	6	50	3.17
5	6	50	6.35
6	6	50	3.17
6	6	50	6.35

D	T	L	d
8	6	60	6.35
8	10	75	6.35
10	6	60	6.35
10	10	75	6.35
10	10	75	9.52
12	6	60	6.35
12	6	60	9.52
12	10	75	6.35
12	10	75	9.52

How to Order: Form, "D" x "T", Superabrasive type, Grit Size, Grade, Concentration, Bond, "L" and Shank Diameter, "d".

Order Example: DW 3,0x5 D80R100B455P4 L = 50, d = 3,17.
DW 10x10 B120R100B444P6 L = 75, d = 6,35.

Acot:mm

DW

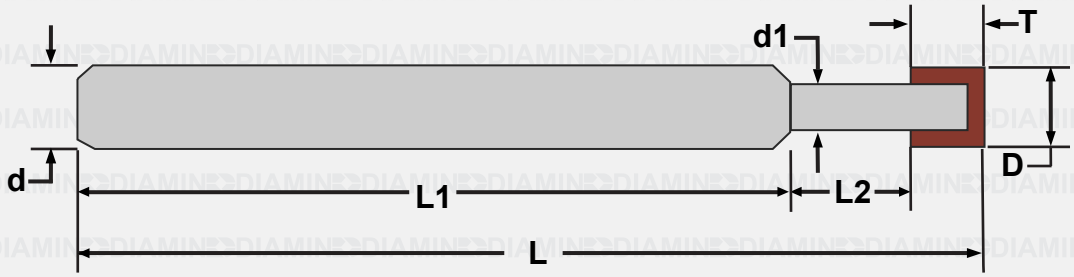

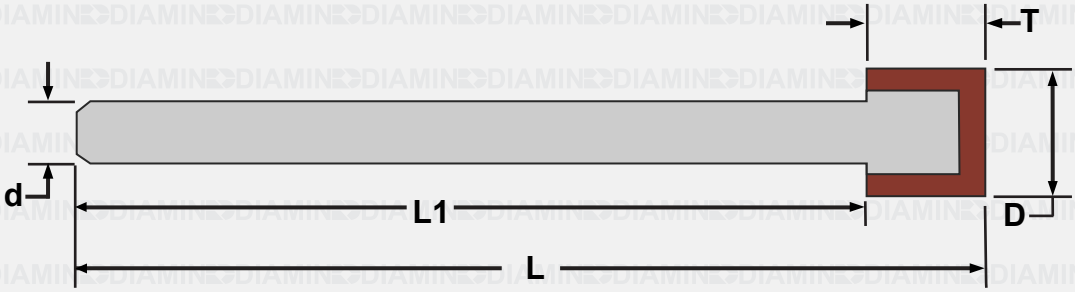

D	T	L	d
13	6	60	6.35
13	6	60	9.52
13	10	75	6.35
13	10	75	9.52
13	13	100	9.52
14	6	60	6.35
14	6	60	9.52
14	10	75	6.35
14	10	75	9.52
14	13	100	9.52
15	10	75	6.35
15	10	75	9.52
15	13	100	9.52
16	10	75	6.35
16	10	75	9.52
16	13	100	9.52

D	T	L	d
18	10	75	6.35
18	10	75	9.52
18	13	100	9.52
20	10	75	6.35
20	10	75	9.52
20	13	100	9.52
25	10	75	6.35
25	10	75	9.52
25	13	100	9.52

Other sizes available.

How to Order: Form, "D" x "T", Superabrasive type, Grit Size, Grade, Concentration, Bond, "L" and Shank Diameter, "d".
Order Example: DW 3,0x5 D80R100B455P4 L = 50, d = 3,17.
DW 10x10 B120R100B444P6 L = 75, d = 6,35.

Acot:mm

DWA

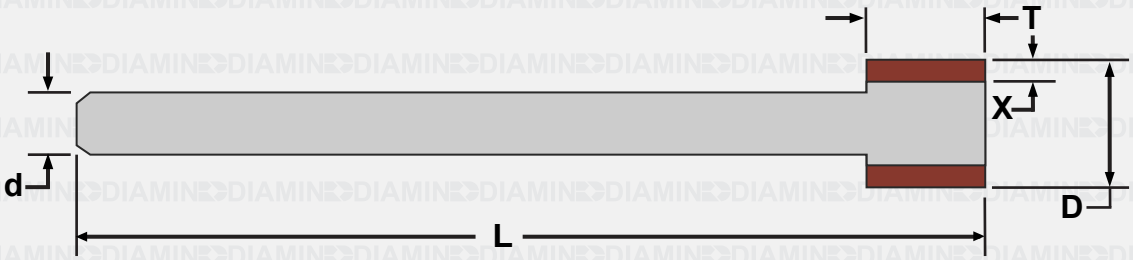

D	T	X	L	d
10	6	2	60	6.35
10	10	2	75	6.35
10	10	2	75	9.52
12	6	2	60	6.35
12	6	2	60	9.52
12	10	2	75	6.35
12	10	2	75	9.52
13	6	3	60	6.35
13	6	3	60	9.52
13	10	3	75	6.35
13	10	3	75	9.52
13	13	3	100	9.52
14	6	3	60	6.35
14	6	3	60	9.52
14	10	3	75	6.35
14	10	3	75	9.52
14	13	3	100	9.52
15	10	3	75	6.35
15	10	3	75	9.52
15	13	3	100	9.52

D	T	X	L	d
16	10	3	75	6.35
16	10	3	75	9.52
16	13	3	100	9.52
18	10	3	75	6.35
18	10	3	75	9.52
18	13	3	100	9.52
20	10	3	75	6.35
20	10	3	75	9.52
20	13	3	100	9.52
25	10	3	75	6.35
25	10	3	75	9.52
25	13	3	100	9.52

Other sizes available.

How to Order: Form, "D" x "T" x "X", Superabrasive type, Grit Size, Grade, Concentration, Bond, "L" and Shank Diameter, "d".
Order Example: DWA 12x10x2 D80R100B455P4 L = 60, d = 6,35.
DWA 20x13x3 B120R100B444p6 L = 100, d = 9,52 .

Acot:mm

BHH1

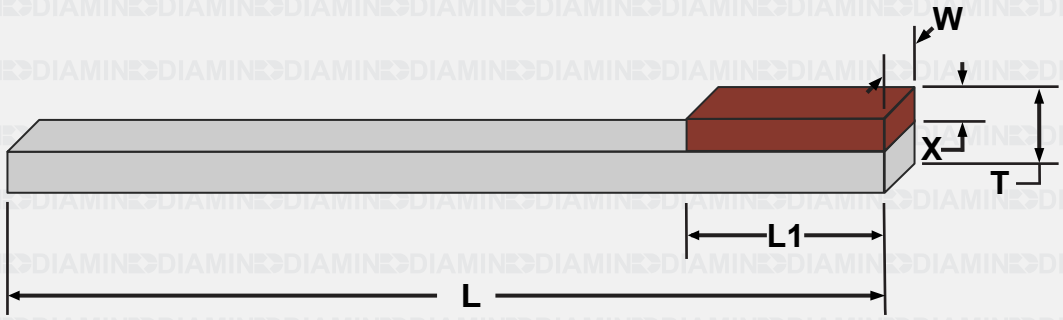

BHH2

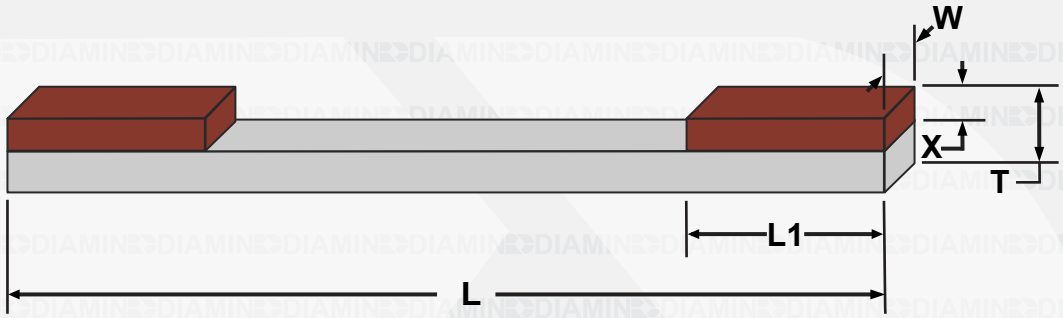

W	L1	X	T	L
3.4	25	3	8	100
10	26	3	10	100
10	41	3	11	100
12	25	3	12	100
10	26	5	10	100
10	41	5	11	100
12	25	5	12	100
3.4	25	3	8	150
10	26	3	10	150
10	41	3	11	150
12	25	3	12	150
10	26	5	10	150
10	41	5	11	150

Other sizes available.

How to Order: Form, "W" x "L1" x "X", Superabrasive type, Grit Size, Grade, Concentration, Bond, "T" and "L".

Order Example: BHH1 10x41x3 D80R100B455P4 T = 11, L = 100.
BHH2 12x25x3 B120R100B314K6 T = 12, L = 150 .

Acot:mm

SINGLE POINT DIAMOND DRESSERS (A)

NOMENCLATURE: A100B-R28

TABLE 2

A	Family of the product
100	Diamond size
B	Quality of the diamond
R	Shank shape
28	Internal number

TABLE 4
QUALITY

AAA	Special selection	4 o 5 natural points, excellent internal structure and shape.
AA	Normal selection	3 o 4 natural points good internal structure and shape.
A		2 o 3 natural points, good shape.
B	Commercial	1 o 2 natural points, good shape.
C		1 o 2 natural points, standard shape.
D		1 natural point, standard shape.
E	Disposable	1 natural point.

TABLE 3
DIAMOND SIZE

CODE	SIZE (carats)
5	0.05
10	0.10
15	0.15
20	0.20
25	0.25
50	0.50
75	0.75
100	1.00
150	1.50
200	2.00
250	2.50
300	3.00
350	3.50
400	4.00
450	4.50
500	5.00

FIGURE 6

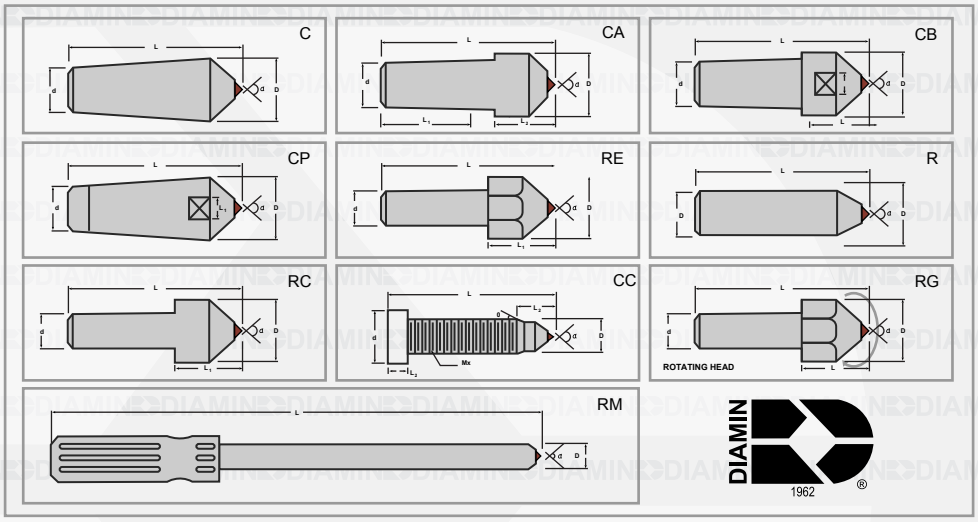

TABLE 5
Recommended diamond size based on the abrasive grinding wheel dimensions

THICKNES	DIAMETER (inches)							
(inches)	4	7	10	14	18	24	30	36
1/2	0.50	0.75	1.00	1.50	2.00	2.50	3.00	3.50
3/4	0.50	0.75	1.00	1.50	2.00	2.50	3.00	3.50
1		0.75	1.00	1.50	2.00	2.50	3.00	3.50
2		1.00	1.50	1.50	2.00	2.50	3.50	4.00
4			1.50	2.50	2.50	3.00	3.50	4.00
6				2.50	2.50	3.00	3.50	4.00

HOW TO ORDER

1) Quantity
2) Family of the product
3) Diamond Size (TABLE 3)
4) Diamond Quality (TABLE 4)
5) Shank shape and size (FIGURE 6)
6) For special tools please send a design.

RECOMENDATIONS

1) Use a diamond size according to TABLE 5 or bigger.

2) The diamond should have an inclination angle 10 - 15° on the moving direction of the table movement, and on the opposite direction of the abrasive wheel rotation.

3) Use coolant in large quantities, directed to the point of contact, never use it after the dressing process has begun.

4) The tool support should be rigid and as short as possible, without vibrations.

5) Depth of cut should be 0.025mm or less.

6) The traverse speed of the tool should be less than the working speed.

7) Should the traverse speed be fast, the wheel will have more cutting capability with a rougher finish. Should the traverse speed be low, the wheel will have less cutting capability with a finer finish.

8) Should the traverse speed be too low, there will be a premature wear on the diamond.

9) We recommend frequently rotating the tool from 20° to 40° on its axis, to generate new cutting edges, once there is a 1 mm^2 it is time to rotate.

MULTIPOINT DIAMON DRESSER (X)

This type of tools should be used when the diamond size recommended for the application is too big, here the working load is divided in several diamonds, material removal is faster, and premature wear is less likely to occur.

NOMENCLATURE: X5B15R1-12

TABLE 16

X	Family of the product
5	Diamond size
B	Quality of the diamond
15	Number of diamonds
R	Shank shape
1	Number of layers
12	Internal number

HOW TO ORDER

1) Quantity
2) Family of the product
3) Diamond Size (TABLE 3)
4) Diamond Quality (TABLE 4)
5) Number of diamonds (FIGURE 7)
6) Shank shape (FIGURE 7)
7) Number of layers (FIGURE 7)
8) For special tools please send a design.

RECOMENDATIONS

1) Use coolant in large quantities, directed to the point of contact, never use it after the dressing process has begun.

2) The tool support should be rigid and as short as possible, without vibrations.

3) The traverse speed of the tool should be less than the working speed.

4) Single point dresser recommendations are valid for multipoint dressers.

FIGURE 7

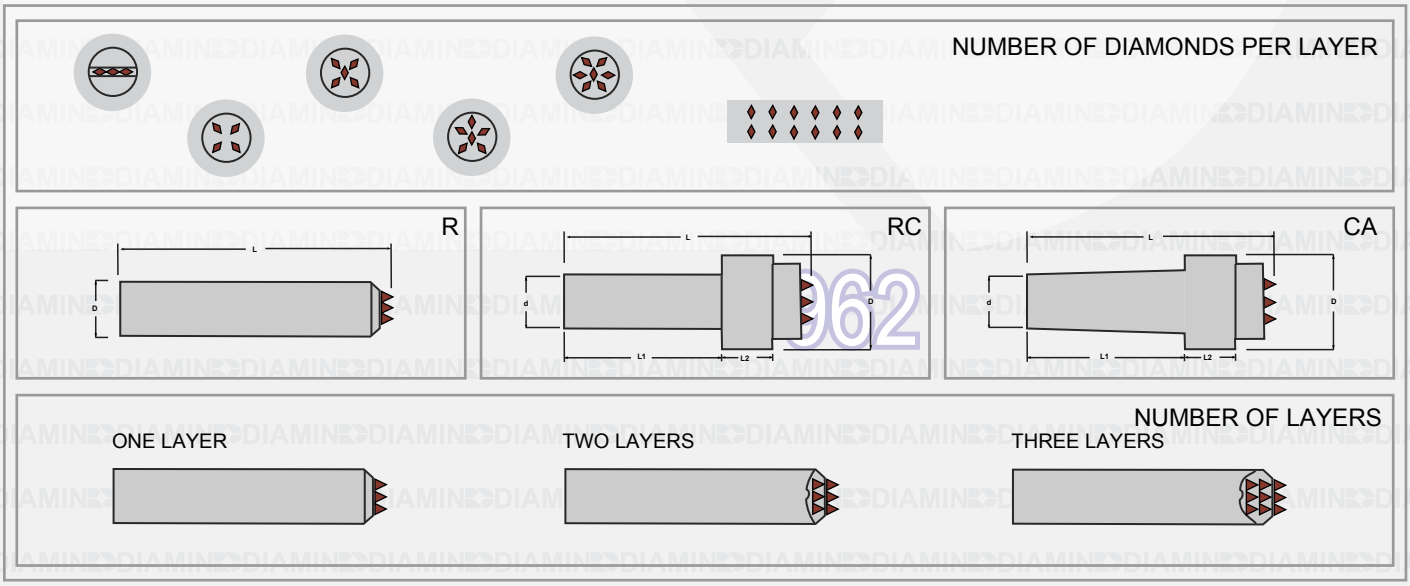

SHAPED DIAMOND DRESSER (H)

This diamond tool is used when a precision profile is needed, only the highest quality of diamonds can be used in the manufacture of this tools.

NOMENCLATURE: H1B100-12

TABLE 17

H	Family of the product
1B	Shape diamond dresser
100	Diamond size
12	Internal number

HOW TO ORDER

1) Quantity
2) Family of the product
3) Diamond Size (TABLE 3)
4) Angle and /or diamond radius (FIGURE 8)
5) Shank dimensions (FIGURE 8)
6) For special tools please send a design.

RECOMENDATIONS

1) Use a diamond size according to Table 5 or bigger.

2) Use coolant in large quantities, directed to the point of contact, never use it after the dressing process has begun.

3) The tool support should be rigid and as short as possible, without vibrations.

4) It is best to use a diamond with an 80° angle with radius up to 1.00 mm for broad profiles, and a 60° angle with radius up to 0.25 mm for narrow profiles.

FIGURE 8

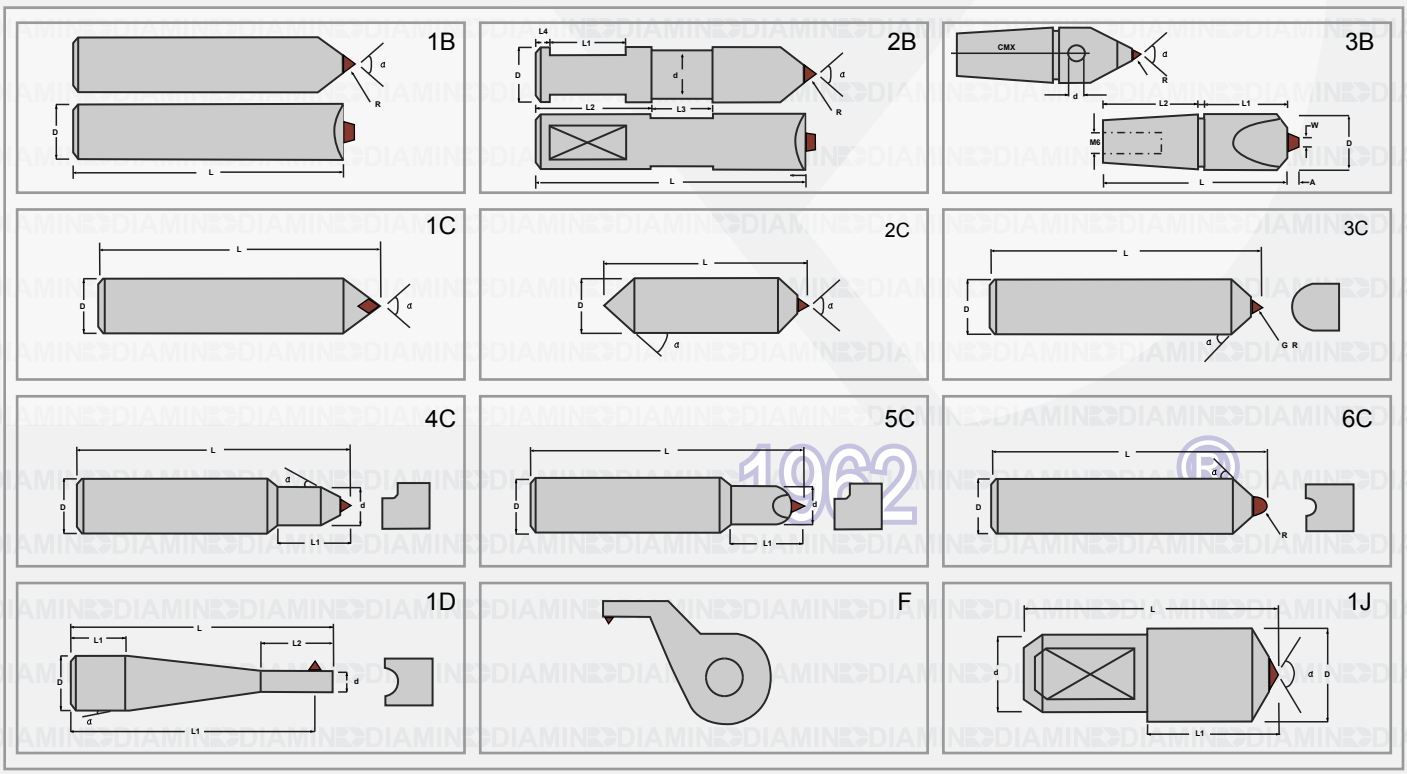

CLUSTER AND MULTIPOINT DIAMOND DRESSER (G)

The main characteristic of this dressing tool is a uniform distribution of the diamond particles in a metal bond with high abrasion resistance.

This tools perform the most economical dressing, and are used in almost any dressing application.

NOMENCLATURE: G1A16-3

TABLE 11

G	Family of the product
1A	Tool dimensions and shape
16	Grain: x Extra Coarse 16 Coarse 30 Medium 60 Fine
3	Internal number

HOW TO ORDER

1) Quantity
2) Family of the product
3) Shape (FIGURE 10) and tool dimensions.
4) Grit size (TABLE 11)
5) Size and specification of the abrasive wheels to be dressed.
6) For special tools please send a design.

RECOMENDATIONS

1) The face of the tool should be in full contact with the abrasive Wheel; with the exception of the type 20 where is adequate to use a 15° angle on the face of the tool.

2) Use coolant in large quantities, directed to the point of contact, never use it after the dressing process has begun.

3) The traverse speed of the tool may be the double the one used with a single point dresser.

4) Working parameters:
Depth of cut 0.025 mm
Longitudinal speed 5 - 10 m /s

5) Use faster longitudinal speeds for roughing and slower for finishing.

6) Depth of cut should be 0.025mm or less to avoid premature wear of the tool.

FIGURE 10

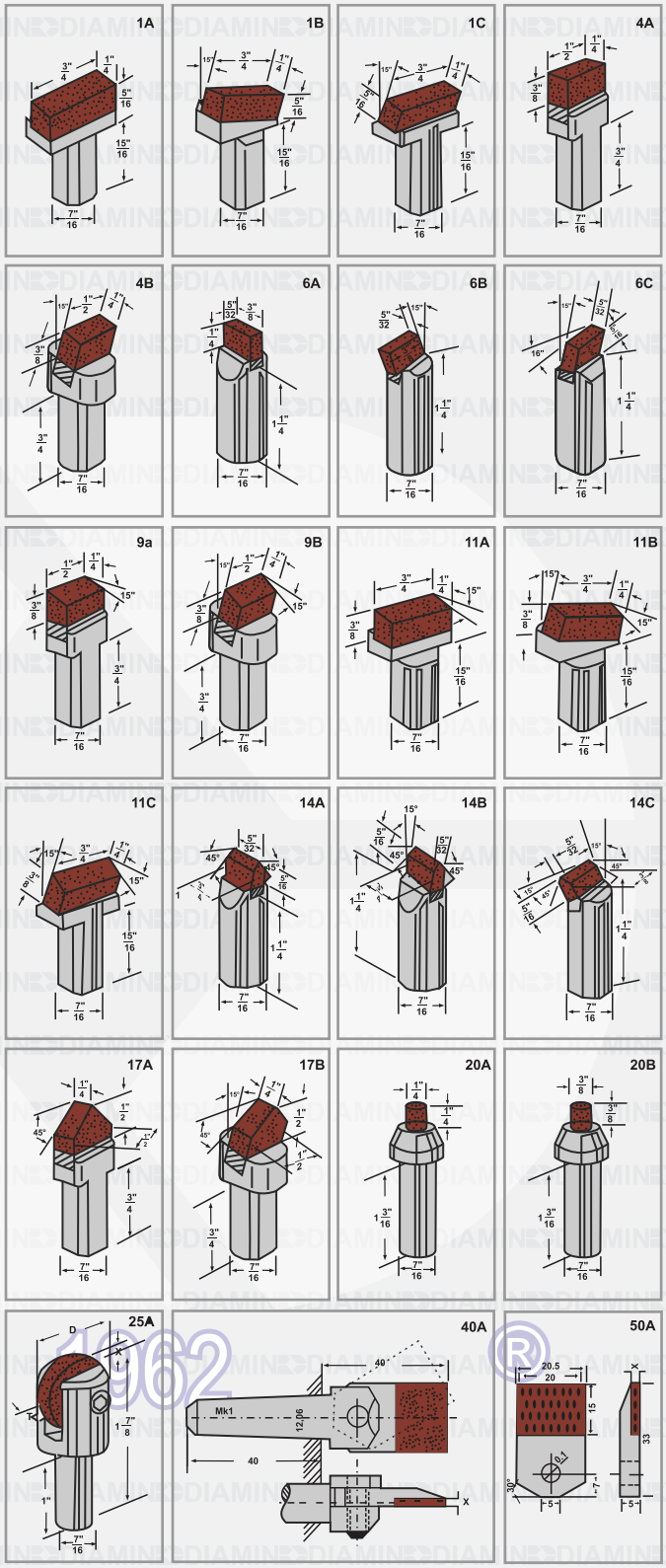

DIAMOND POWDER (C)

DIAXIN®

Making the correct choice for the type of diamond as well as the grades to be used in a polishing process are the first steps to obtain high productivity.

We offer a wide variety of diamonds powder, natural and synthetic in all available grades, with their different characteristics. This is how we are able to offer the type of diamond that is best suited for your process.

If the diamond powder you need is not in table 8, please make your request with our sales department.

NOMENCLATURE: C27L8C-10

TABLE 12

C	Family of the product
27	Micron code
L8C	Type of diamond powder
10	Internal number

HOW TO ORDER

1) Quantity
2) Family of the product
3) Grade (TABLE 13)
4) Conteiner
5) Material to be polished and finish required

TABLE 13

CODE	MICRON	GRADE	MESH
1	0 - 1/4	1/8	200,000
2	0 - 1/2	1/4	100,000
3	0 -1	1/2	60,000
4	1/2 - 1	3/4	28,000
5	0 - 2	1	14,000
9	1 - 2	1 1/2	13,000
12	1 - 5	3	9,000
14	2 - 4	3	8,000
16	3 - 6	5	4,500
18	4 - 8	6	3,000
19	5 -10	71/2	2,500
21	6 - 12	9	1,800
24	8 - 16	12	1,600
27	10 - 20	15	1,200
32	20 - 30	25	800
33	20 - 40	30	575
37	30 - 60	45	400
40	40 - 80	60	260

TABLE 14

MICRON	APROX NUMBER OF PARTICLES PER CARAT	AVERAGE DIAMETER
60	264,000	0.0061
45	620,000	0.0046
30	2,046,000	0.0030
15	16.960.000	0.0015
9	78.600.000	0.00089
6	262.000.000	0.00061
3	2.050.000.000	0.00030
1	62.000.000.000	0.00010

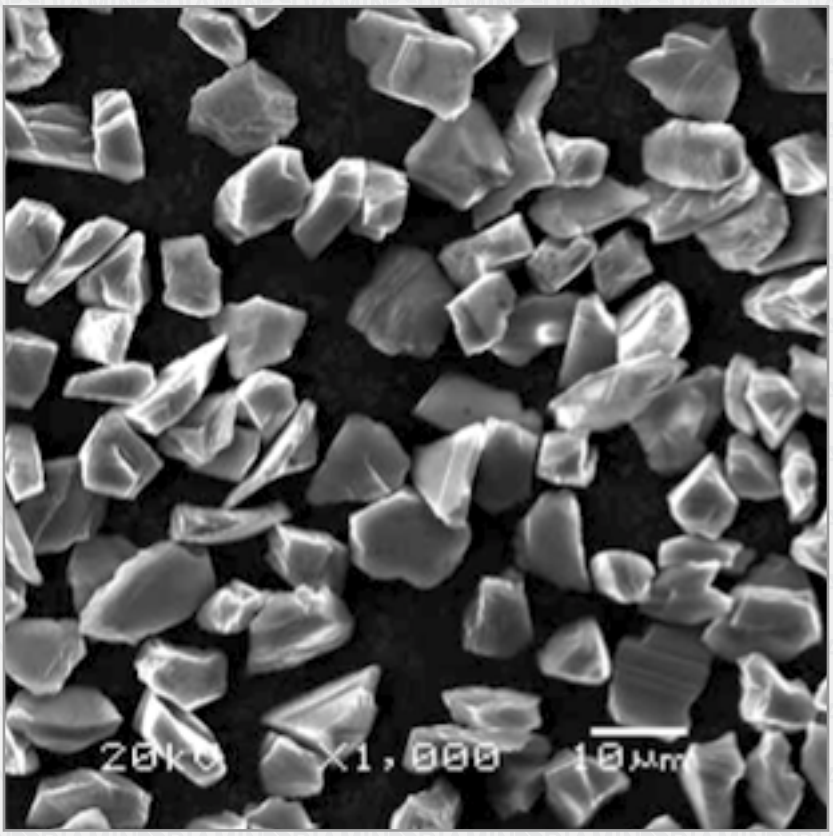

DIAMOND COMPOUND (D)

DIAXIN®

The diamond compound is successfully used in any polishing or lapping process.

We Offer different curriers with different properties to fully use the main properties of the diamond particles. The combination of this properties allows us to supply the appropriate diamond compound for every application.

This product is available in 5, 10, 18 and 20 gr syringe, as well as 25, 50, 100 and 200 gr jar.

NOMENCLATURE: D21A9L8C-15

TABLE 15

D	Family of the product
21	Micron code
A	Concentration
5	Carrier
L8C	Type of diamond
15	Internal number

HOW TO ORDER

1) Quantity
2) Family of the product
3) Grade (TABLE 16)
4) Concentration
5) Conteiner
6) Material to be polished and finish required

TABLE 16

CODE	MICRON	GRADE	MESH	COLOR	CONCENTRATION			APPLICATION
1	0 - 1/4	1/8	200.000	Dark grey	Standard	Aaverage	High	Precision finishing
2	0 -1/2	1/4	100.000	Medium grey				
3	0 -1	1/2	60.000	Light grey				
5	0 - 2	1	14,000	Off-white				
12	1 - 5	3	9.000	Yellow				Finishing
16	3 - 6	5	4,500	Light orang				
18	4 - 8	6	3,000	Dark orange				
21	6 - 12	9	1,800	Green				Preparatory finishing
27	10 - 20	15	1,200	Blue				
33	20 - 40	30	575	Red				
37	30 - 60	45	400	Brown				
40	40 - 80	60	260	Purple				Stock removal
28k			170	Grey				
26k			120	Black				

ELECTROPLATED DIAMOND AND CBN TOOLS (E)

This type of bond is used when a constant profile with high cutting power is needed. They are used for working tungsten carbide, reinforced plastic, polyester, asbestos, melamine, silicon epoxy and phenolic resins (with fiber glass), graphite and carbon among others.

Because of the particular characteristics of this type of bond, the working pressure should be minimal; hence the diamond is exposed and does the grinding at the moment of contact with the work piece, a high working pressure reduces the life of the tool.

It is possible to manufacture almost any shape with this process, and coat special profiles for our customers with different grit sizes.

DIAMOND FILES

NOMENCLATURE: EI20A-170

TABLE 17

E	**Family of the product**		
I 20	**Shape**		
A	**Size:**		
		Legth Total	**Legth Diamond**
	A	70 mm	35 mm
	B	140 mm	70 mm
	C	150 mm	25+25 mm
	D	225 mm	110 mm
170	**Grit Size:**		
	80 Coarse		
	120 Medium		
	170 Fine		

HOW TO ORDER

1) Quantity
2) Family of the product
3) Shape (FIGURE 11)
4) Size (TABLE 17 AND FIGURE 11)
5) Grit (TABLE 17)

FIGURE 11

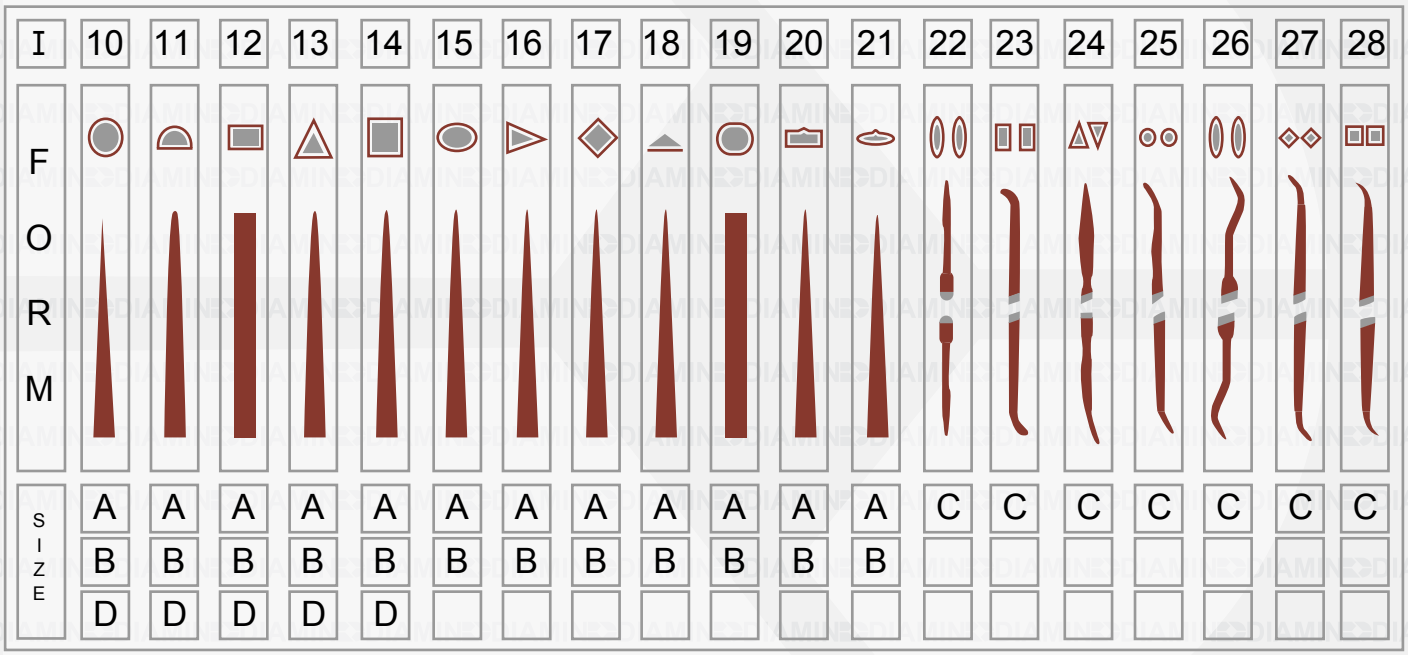

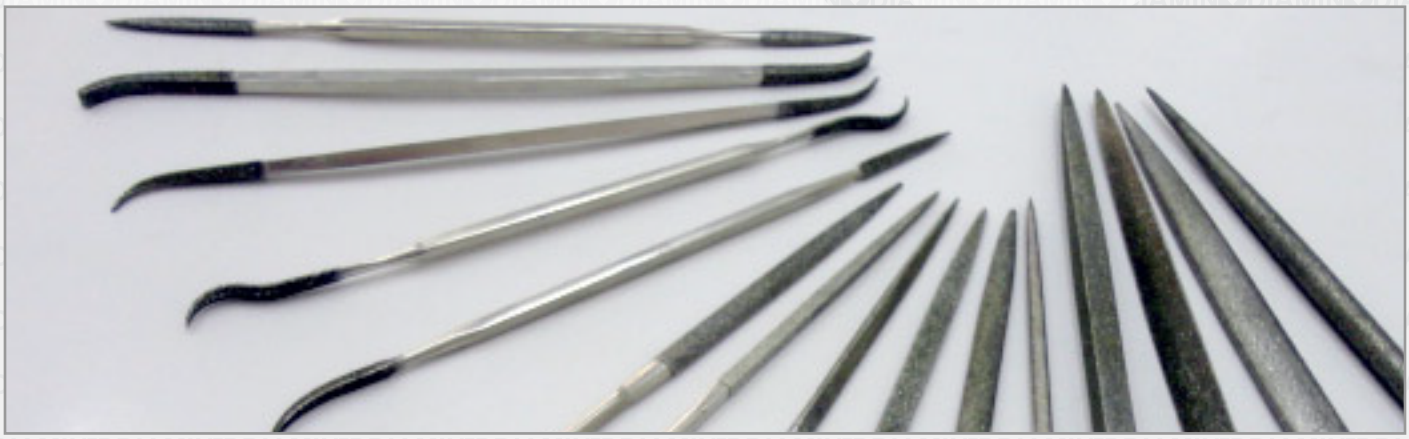

ELECTROPLATED MOUNTED POINTS

NOMENCLATURE: EA1B170-30

TABLE 18

E	Family of the product
A1	Shape
B	Superabrasive type: D diamond B CBN (Cubic Boron Nitride)
170	Grain: 80 Coarse 120 Medium 170 Fine
30	Internal number

HOW TO ORDER

1) Quantity
2) Family of the product
3) Shape (FIGURE 12)
4) Type of super abrasive (TABLE 18)
5) Grit (TABLE 18)
6) For special tools please send a design.

RECOMENDATIONS

1) The machine should not have any vibrations and in good conditions.
2) The tool should be firmly mounted, and the exentricity should not be more than 0.005 mm to avoid irregular wear.
3) Use the appropriate tool for each application, there is no such thing as a “tool for all applications”.
4) Working parameters.
4a) Peripheral speed
(TABLE OF PERIPHERAL SPEED (Page 6)).
Dry grinding: 18 m/s
Wet grinding: 9 m/s
4b) Longitudinal speed: 0.05mm/s
4c) Depth of cut:

Mesh:	60-120	0.030 mm
	140 -230	0.015 mm
	270 and finer	0.007 mm

5) Do not use excessive depth of cut.

FIGURE 12

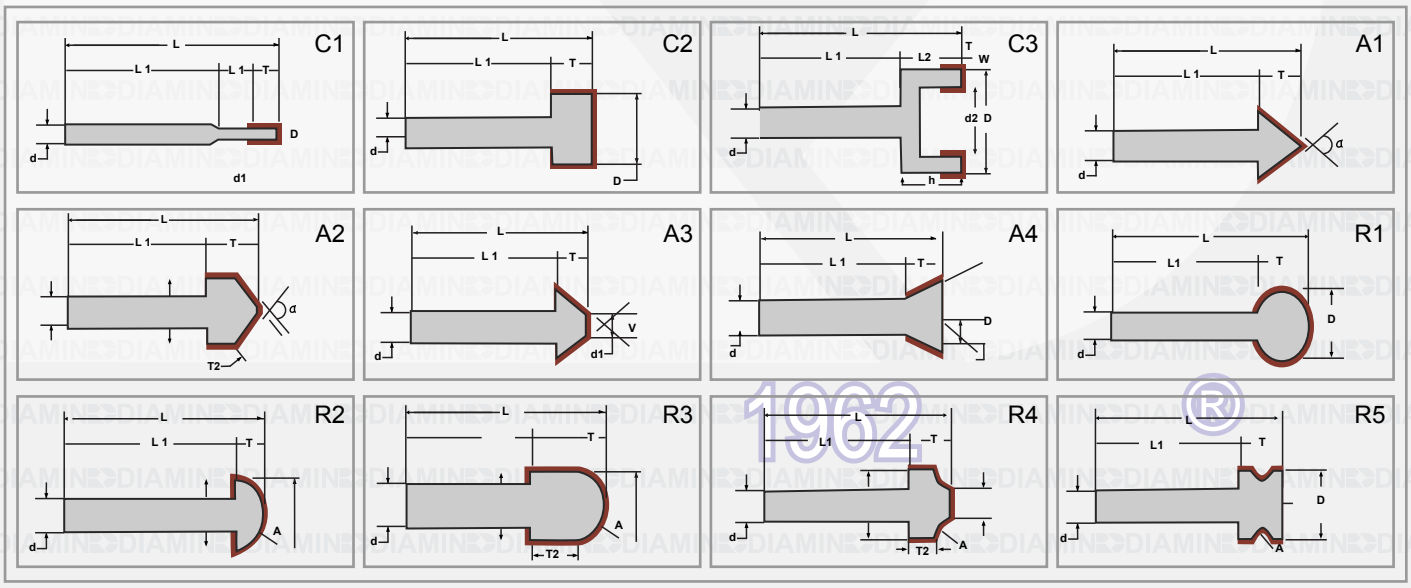

I.D GRINDING ELECTROPLATED TYPE C1

C1

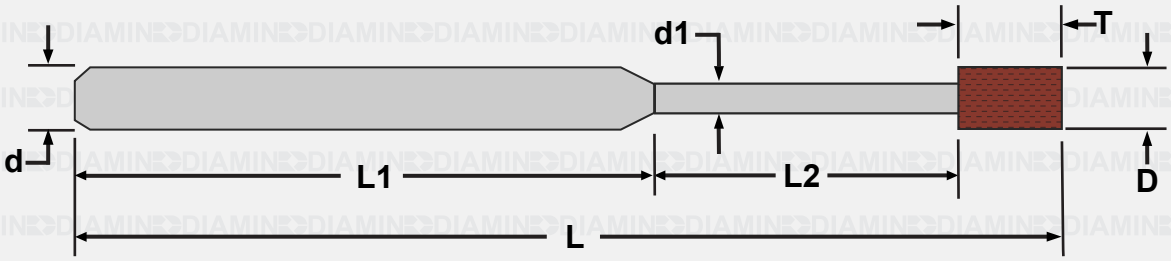

D	T	L	d	L1	L2
1.0	3	50	3.17	43	4
1.5	3	50	3.17	40	7
2.0	5	50	3.17	37	8
2.5	5	50	3.17	35	10
3.0	5	50	3.17	35	10
3.17	5	50	3.17	35	10
3.5	6	60	6.35	40	14
4.0	6	60	6.35	40	14
4.5	6	60	6.35	40	14
4.76	6	60	6.35	40	14
5.0	6	60	6.35	40	14
5.5	6	60	6.35	40	14
6.0	7	75	6.35	50	18
6.35	7	75	6.35	50	18
6.5	7	75	9.52	50	18
7.0	7	75	9.52	50	18
7.5	8	75	9.52	45	22
8.0	8	75	9.52	45	22
8.5	8	75	9.52	45	22
9.0	8	75	9.52	45	22
9.5	8	75	9.52	45	22

How to Order: Form, Superabrasive type, Grit size "D" x "T", L, "d".
Order Example: EC1D120 D=2.0, T=5, L = 50, d=3.17
EC1B170 D=2.0, T=5, L = 50, d=3.17

Acot:mm

I.D GRINDING ELECTROPLATED TYPE C1

C1

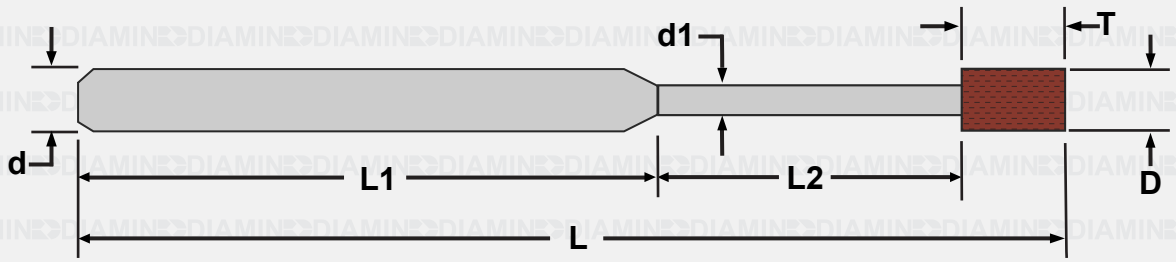

D	T	L	d	L1	L2
10.0	10	100	12.70	65	25
11.0	10	100	12.70	65	25
12.0	10	100	12.70	65	25
12.7	10	100	12.70	65	25

Other sizes available.

How to Order: Form, Superabrasive type, Grit size "D" x "T", L, "d".
Order Example: EC1D120 D=2.0, T=5, L = 50, d=3.17
EC1B170 D=2.0, T=5, L = 50, d=3.17

Acot:mm

I.D GRINDING ELECTROPLATED TYPE C2

C2

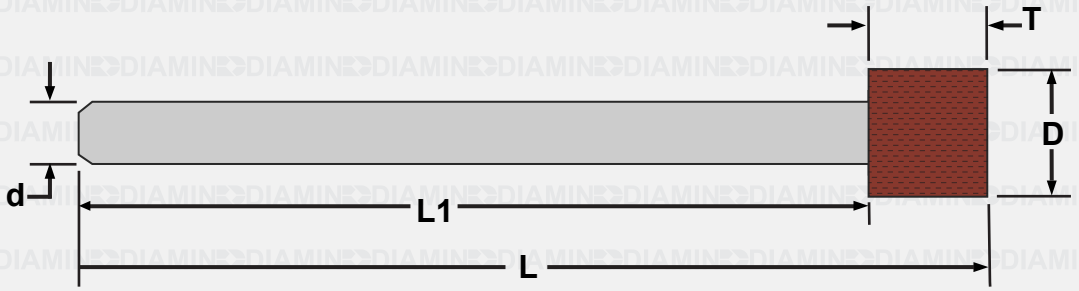

D	T	L	d	L1
3.5	6	60	3.17	54
4.0	6	60	3.17	54
4.5	6	60	3.17	54
4.76	6	60	3.17	54
5.0	6	60	3.17	54
5.5	6	60	3.17	54
6.0	7	60	3.17	53
6.35	7	60	3.17	53
6.5	7	75	6.35	68
7.0	7	75	6.35	68
7.5	8	75	6.35	67
8.0	8	75	6.35	67
8.5	8	75	6.35	67
9.0	8	75	6.35	67
9.5	8	75	6.35	67
10.0	10	75	6.35	65
11.0	10	75	6.35	65
12.0	10	75	6.35	65
12.7	10	75	6.35	65
13.0	10	75	6.35	65

How to Order: Form, Superabrasive type, Grit size "D" x "T", L, "d".
Order Example: EC2D120 D=10.0, T=10, L = 75, d=6.35
EC2B120 D=10.0, T=10, L = 75, d=6.35

Acot:mm

I.D GRINDING ELECTROPLATED TYPE C2

C2

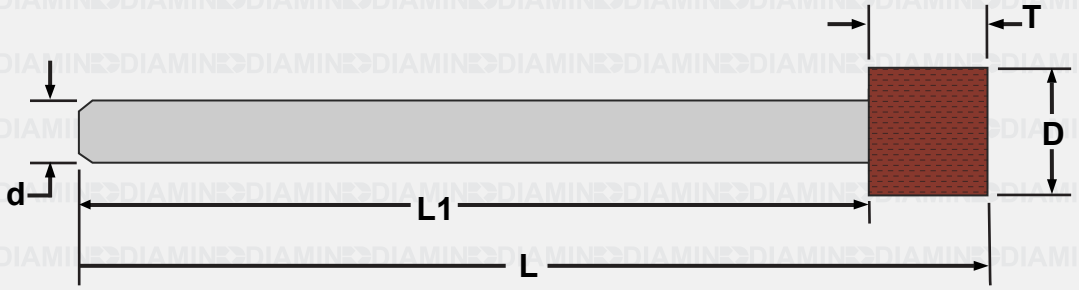

D	T	L	d	L1
10.0	10	100	9.52	90
11.0	10	100	9.52	90
12.0	10	100	9.52	90
12.7	10	100	9.52	90
13.0	13	100	9.52	87
14.0	13	100	9.52	87
15.0	13	100	9.52 , 12.7	87
15.87	13	100	9.52 , 12.7	87
16.0	13	100	9.52 , 12.7	87
18.0	13	100	9.52 , 12.7	87
19.0	13	100	9.52 , 12.7	87
20.0	13	100	9.52 , 12.7	87
22.0	13	100	9.52 , 12.7	87
25.0	13	100	9.52 , 12.7	87
25.4	13	100	9.52 , 12.7	87
28.0	13	100	9.52 , 12.7	87
30.0	13	100	9.52 , 12.7	87
31.75	13	100	12.7	87
35.0	13	100	12.7	87
38.1	13	100	12.7	87

Other sizes available.

How to Order: Form, Superabrasive type, Grit size "D" x "T", L, "d".
Order Example: EC2D120 D=10.0, T=10, L = 75, d=6.35
EC2B120 D=10.0, T=10, L = 75, d=6.35

Acot:mm

I.D GRINDING ELECTROPLATED TYPE A1

A1

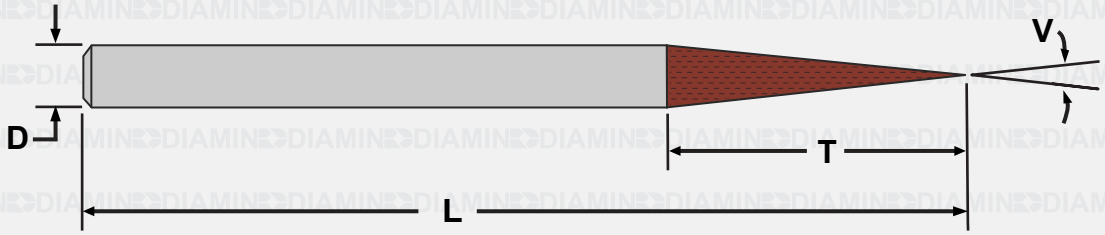

D	T	L	V
3.0	26.2	60.0	6°
3.17	27.8	63.5	6°
6.0	54.8	100	6°
6.35	58.2	100	6°
3,0	19.2	60	8°
3,17	20.9	63,5	8°
6,0	41	100	8°
6,35	43.6	100	8°
3.0	15.7	60.0	10°
3.17	16.7	63.5	10°
6.0	32.8	100	10°
6.35	34.8	100	10°

D	T	L	V
3.0	13.1	60.0	12°
3.17	13.9	63.5	12°
6.0	27.4	75.0	12°
6.35	29.0	76.2	12°
3.0	11.2	60.0	14°
3.17	11.9	63.5	14°
6.0	23.4	75.0	14°
6.35	24.8	76.2	14°
3.0	9.8	60.0	16°
3.17	10.4	63.5	16°
6.0	20.5	75.0	16°
6.35	21.7	76.2	16°

How to Order: Form, Superabrasive type, Grit size, "D" x "V", "L".
Order Example: EA1D140 6.35-12° L = 76

Acot:mm

I.D GRINDING ELECTROPLATED TYPE A1

A1

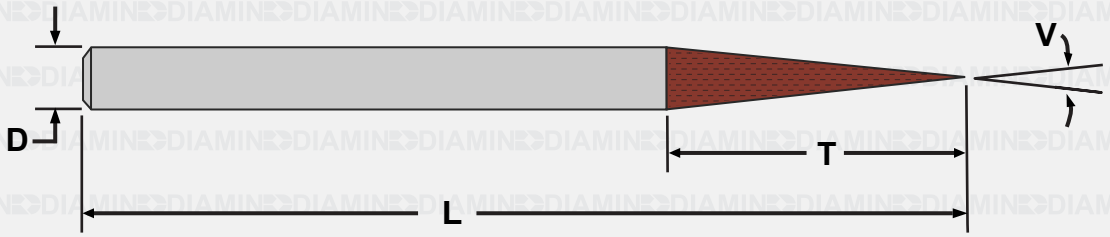

D	T	L	V
6.35	11.8	76.2	30°
6.35	5.4	76.2	60°

D	T	L	V
6.35	7.6	76.2	45°
6.35	3.17	76.2	90°

Other sizes available.

How to Order: Form, Superabrasive type, Grit size, "D" x "V", "L".
Order Example: EA1D140 6.35-12º L = 76

Acot:mm

I.D GRINDING ELECTROPLATED TYPE A2

A2

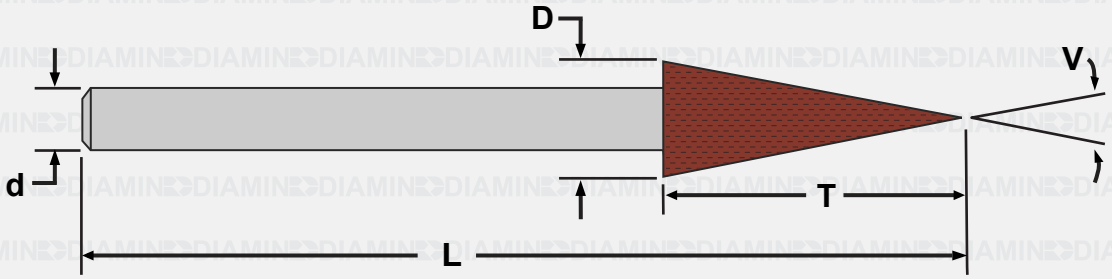

D	T	L	d	V
9.52	44.1	80.0	6.35	12°
7.93	14.7	100	6.0	30°
9.52	17.7	100	6.0	30°
12.7	23.6	100	6.0	30°
7.93	14.7	100	6.35	30°
9.52	17.7	100	6.35	30°
12.7	23.6	100	6.35	30°
7.93	6.8	100	6.0	60°
9.52	8.2	100	6.0	60°
12.7	11.0	100	6.0	60°
7.93	6.8	100	6.35	60°
9.52	8.2	100	6.35	60°
12.7	11.0	100	6.35	60°

D	T	L	d	V
7.93	9.5	100	6.0	45°
9.52	11.4	100	6.0	45°
12.7	15.3	100	6.0	45°
7.93	9.5	100	6.35	45°
9.52	11.4	100	6.35	45°
12.7	15.3	100	6.35	45°
7.93	3.9	100	6.0	90°
9.52	4.7	100	6.0	90°
12.7	6.3	100	6.0	90°
7.93	3.9	100	6.35	90°
9.52	4.7	100	6.35	90°
12.7	6.3	100	6.35	90°

Other sizes available.

How to Order: Form, Superabrasive type, Grit size, "D" x "V", L, "d".
Order Example: EA2D140 9.52-12º L = 80, d=6.35

Acot:mm

TECHNICAL INFORMATION

EXPECTED SURFACE FINISH BY GRIT SIZE

This Table is a general guide, there are many factors that influence the surface finsh.

Diamond

Grit Size	Expected Finish (Microinch AA)	Maximun depth of cut per pas for grit size
100	24 a 32	0.025" a 0.005"
120	17 a 18	0.025" a 0.005"
140	14 a 16	0.025" a 0.005"
170	12 a 14	0.017" a 0.025"
200	10 a 12	0.017" a 0.025"
270	8	0.010" a 0.015"
325	7 a 8	0.007" a 0.013"

TABLE 20

FEPA	ATSME 11
Wide Range	
D1182	16/20
D852	20/30
D602	30/40
D427	40/50
D252	60/80
Narrow Range	
D1181	16/18
D1001	18/20
D851	20/25
D711	25/30
D601	30/35
D501	35/40
D426	40/45
D356	45/50
D301	50/60
D251	60/70
D213	70/80
D181	80/100
D151	100/120
D126	120/140
D107	140/170
D91	170/200
D76	200/230
D64	230/270
D54	270/325
D46	325/400

TABLE OF EQUIVALENTS

Inches Fraction		Milimeters	Inches Fraction		Milimeters
1/64	0.0156	0.3969	33/64	0.5156	13.0969
1/32	0.0313	0.7938	17/32	0.5313	13.4938
3/64	0.0469	1.1906	35/64	0.5469	13.8906
1/16	00625	1.5875	9/16	0.5625	14.2875
5/64	0.0781	1.9844	37/64	0.5781	14.6844
3/32	0.0938	2.3813	19/32	0.5938	150813
7/64	0.1094	2.7781	39/64	0.6094	15.4781
1/8	0.1250	3.1750	5/8	0.6250	15.8750
9/64	0.1406	3.5719	41/64	0.6406	16.2719
5/32	0 1563	3.9688	21/32	0.6563	166688
11/64	0.1719	4.3656	43/64	0.67 19	17.0656
3/16	0.1875	4.7625	11/16	0.6875	17.4625
13/64	0.2031	5 1594	45/64	0.7031	17.8594
7/32	0.2188	5.5563	23/32	07188	18 2563
15/64	0.2344	5.9531	47/64	07344	18.6531
1/4	0.2500	6.3500	3/4	0.750 0	19 050 0
17/64	0.2656	6.7469	49/64	0.7656	19.4469
9/32	0.2813	71438	25/32	0.7813	198438
19/64	0.2969	7.5406	51/64	07969	20.2406
5/16	0.3125	7.9375	13/16	0.8125	206375
21/64	0.3281	8.3344	53/64	0.8281	21.0344
11/32	0.3438	8.73 13	27/32	0.8438	21.4313
23/64	0.3594	9:1281	55/64	0.8594	21.8281
3/8	0.3750	9.5250	7/8	0.8750	22.2250
25/64	0.3906	9:9"2i9	57/64	08906	226219
13/32	0.4063	10 .3188	29/32	0.9063	23.0188
27/64	0.4219	10.71 56	59/64	0.92 19	23.4156
7/16	0.4 375	11.1125	15/16	0.937 5	238125
29/64	0.453 1	11 5094	61/64	0.9531	24.2094
15/32	0.4688	11.9063	31/32	0.9688	24.6063
31/64	0.4844	12 .3031	63/64	0.9844	25.003 1
1/2	050	12.70	1	1.00	25.40

Application Shet

Date:

Wheel Shape _____ Wheel Spec _____

D= T= X= H= W= U= Angle=

Material to be ground:

Work piece description (Type of tool):

Machine:

Brand _____ Model _____ H P _____ Obs _____

Working Conditions:

RPM or Peripheral Seed: _____ Infeed _____ mm/min

Depth of cut: _____ mm

Lubricant: Presure _____ High Presure _____ Water _____ Oil _____

Infeed: Manual _____ Automatic _____

Notes:

DIAMIN 1962 ®

Diamantes Industriales SA de CV

El Diamante en todas sus formas ®
para la industria

Gral. Gómez Pedraza 11-203,

Col. San Miguel Chapultepec,

C.P. 11850, México DF

Tels. (52) 55 5271.2707

(52) 55 5271.3788

(52) 55 5271.6998

Fax. (52) 55 5516.4033

www.diamin.com

ventas@diamin.com.mx

DIAXIN ®